ADDENDUM NO. 1

Raw Water Intake Structure
Edgard Water Treatment Plant
St. John the Baptist Parish, Louisiana

DATE ISSUED: June 7, 2011 EES PROJECT NO. 0933
BID DATE: June 14, 2011

This Addendum shall be considered as included and/or amended in the original Contract Documents and shall take precedence over any part of the original documents or previous addendum in conflict therewith. This Addendum contains 3 pages. All bidders shall ensure all sheets of this Addendum are enclosed. If sheets are missing from this Addendum, it is the responsibility of the Bidder to notify the Engineer seventy-two (72) hours prior to the bid date and time.

STATE OF LOUISIANA
ROBERT P. GUILLOT, JR.
License No. 30576
PROFESSIONAL ENGINEER
IN CIVIL ENGINEERING
6/7/11

I. SPECIFICATIONS

Administrative Section

A. Section 00500 – Agreement

Remove the existing paragraph 3.1 on page 00500-1 which reads:

"The CONTRACTOR shall be commence work under this Contract on a date to be specified by written order of the Engineer. Time of performance is of the essence of the Contract and the work shall be complete, as certified by the Engineer, within **100** calendar days, from the date of commencement of the work."

and **Replace** it with:

"The CONTRACTOR shall be commence work under this Contract on a date to be specified by written order of the Engineer. Time of performance is of the essence of the Contract and the work shall be complete, as certified by the Engineer, within **120** calendar days, from the date of commencement of the work."

II. DRAWINGS

A. Sheet S02

1. **Remove** the note on Detail 6 which reads:

"W 18x26 (typ 2)"

and **Replace** it with the following:

"W 10x26 (typ 2)".

2. **Remove** the note on Section A which reads:

   "W 18x26 (typ 2)"

   and **Replace** it with the following:

   "W 10x26 (typ 2)".

B. Sheet S03

Add the attached Sheet S03.

C. Sheet GN

1. **Remove** all references to Aluminum and **Replace** it with Hot Dip Galvanized. All handrails to be 1 ½ inch diameter Hot Dip Galvanized Steel Pipe. Attachments and splices shall be Hot Dip Galvanized.

2. **Add** the following to General Notes:

   "25. Bar grating shall be hot dip galvanized. Bar grating shall have a non-slip serrated finish."

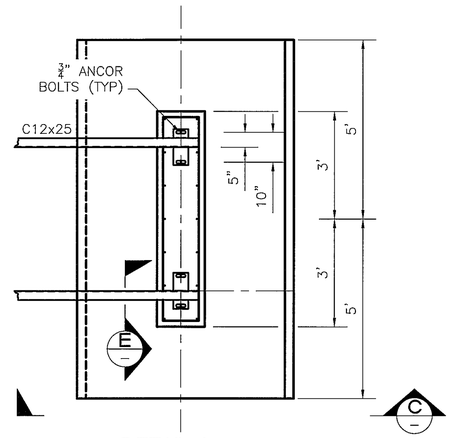

DETAIL 6
CONCRETE SUPPORT PLAN
SCALE: 1/2" = 1'-0"

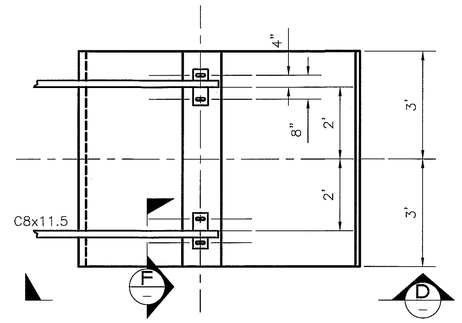

DETAIL 7
CONCRETE PAD
SCALE: 1/2" = 1'-0"

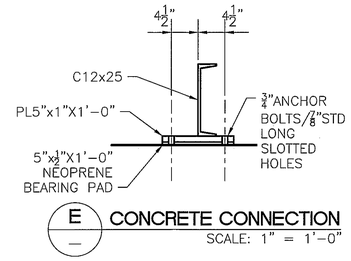

E — **CONCRETE CONNECTION**
SCALE: 1" = 1'-0"

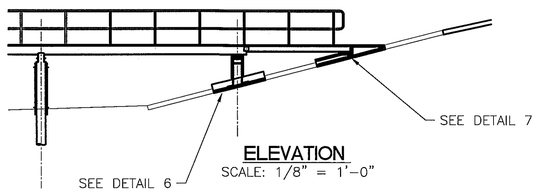

ELEVATION
SCALE: 1/8" = 1'-0"

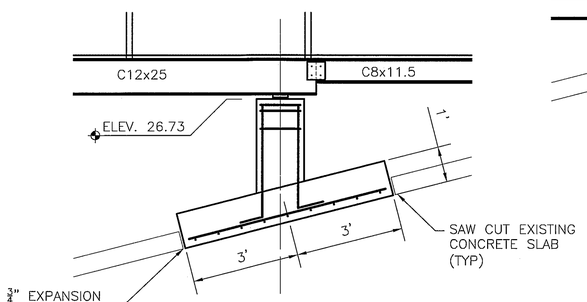

C — **CONCRETE PAD**
SCALE: 1/2" = 1'-0"

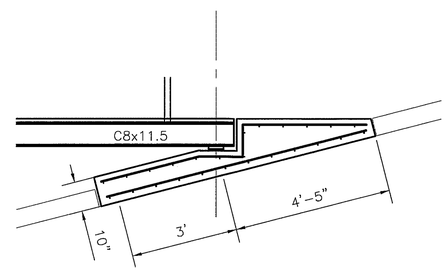

D — **CONCRETE PAD**
SCALE: 1/2" = 1'-0"

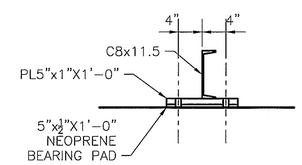

F — **CONCRETE CONNECTION**
SCALE: 1" = 1'-0"

ADDENDUM 1
2011-06-07

STATE OF LOUISIANA
ROBERT P. GUILLOT, JR.
License No. 30576
PROFESSIONAL ENGINEER
IN CIVIL ENGINEERING
6/7/11

DESIGNED	OJB
DRAWN	BMZ
CHECKED	RPG
DATE	08/10

NO.	DATE	DESCRIPTION	BY

OWNER: EDGARD WATER TREATMENT PLANT

PROJECT: EDGARD WATER TREATMENT PLANT
RAW WATER INTAKE STRUCTURE WALKWAY
EDGARD, ST. JOHN THE BAPTIST PARISH, LOUISIANA

PROJECT: 0933

FILENAME: S:\Yr 2009\0933\30\dwg\RAW WATER INTAKE STRUCTURE.dwg TAB NAME: S03

SCALE CONVERSION
0 1 2 3 4
SCALE: AS NOTED

Environmental Engineering Services, Inc.
CONSULTING ENGINEERS
610 BELLE TERRE BLVD.
LAPLACE, LA 70068
PHONE (985) 653-0185
FAX (985) 653-0182

STRUCTUAL DETAILS

This drawing and design is the property of E.E.S., Inc. It is furnished on the condition that it is not to be used, reproduced, or copied, in whole or part or used for information to others, without the express written consent of copyright of E.E.S., Inc. All copyright privileges granted by law are hereby specifically reserved.

SHEET: S03