HOMEWOOD AREA
DRAINAGE IMPROVEMENTS
FOR
ST. JOHN THE BAPTIST PARISH

MAY 2011

INDEX TO SHEETS

SHEET NO.	DESCRIPTION
1	TITLE SHEET
2	GENERAL NOTES
2a	SITE PLAN
3	PLAN & PROFILE SHEET
4	PROPOSED BERM ELEVATIONS
5-7	DETAILS
8-9	EROSION CONTROL SHEETS
10-15	TEMPORARY TRAFFIC CONTROL SHEETS

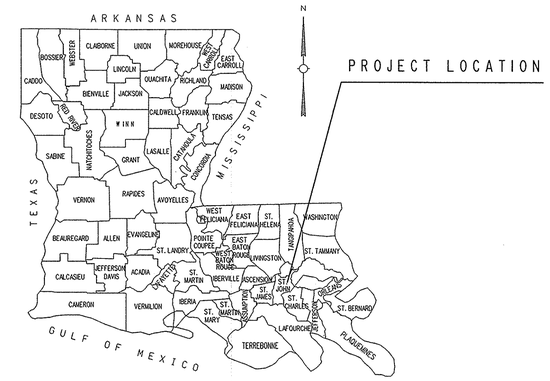

VICINITY MAP

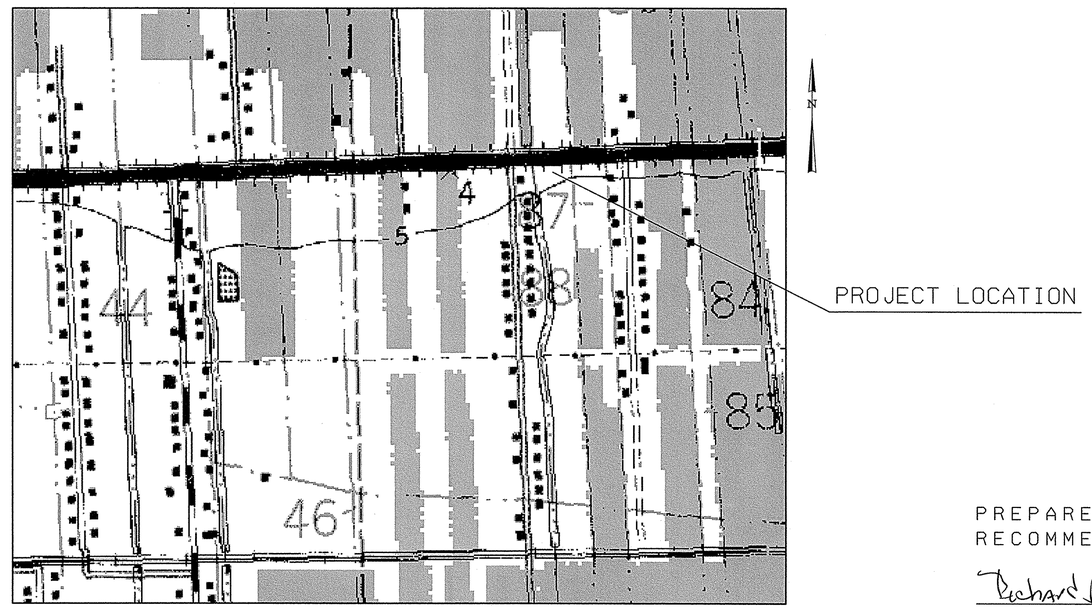

LAYOUT MAP

500 0 500

SCALE IN FEET

NATALIE ROBOTTOM
PARISH PRESIDENT

LUCIEN J. GAUFF, III
COUNCILMAN AT LARGE - DIVISION A

STEVE LEE
COUNCILMAN AT LARGE - DIVISION B

HASTON LEWIS, SR.	DISTRICT 1
DANNY MILLET	DISTRICT 2
CHARLES JULIEN	DISTRICT 3
JACLYN HOTARD	DISTRICT 4
DARNEL C. USRY	DISTRICT 5
RONNIE SMITH	DISTRICT 6
CHERYL MILLET	DISTRICT 7

TYPE OF CONSTRUCTION

DRAINAGE IMPROVEMENTS

STATE OF LOUISIANA
RICHARD R. SHREAD
License No. 18983
PROFESSIONAL ENGINEER
IN
CIVIL ENGINEERING

PREPARED BY AND
RECOMMENDED FOR APPROVAL

Richard R. Shread 5/3/11
SHREAD-KUYRKENDALL & ASSOCIATES DATE

APPROVED

5/5/11
C.J. SAVOIE DATE
PARISH ENGINEER

APPROVED

5/5/11
MICHAEL R. CARMOUCHE DATE
CAPITAL PROJECTS ADMINISTRATOR

SHREAD-KUYRKENDALL & ASSOCIATES
ENGINEERS - SURVEYORS - PLANNERS
BATON ROUGE, LOUISIANA

E:\CADD\89091\89091.9K\TITLE.DGN

PARISH	SHEET NO.
ST. JOHN	2

GENERAL NOTES:

1. FLAP GATES WHERE REQUIRED AT EXISTING CULVERTS SHALL BE CAST IRON TYPE AS MANUFACTURED BY WATERMAN OR APPROVED EQUAL. ALL APPURTENANCES REQUIRED FOR PROPER INSTALLATION OF GATES SHALL BE INCLUDED IN CONTRACTOR'S BID PRICE FOR THIS ITEM.

2. CONCRETE DRIVES AND SIDEWALKS SHALL BE SAW CUT OR REMOVED TO THE NEAREST EXISTING JOINT.

3. SIDEWALKS AND DRIVES REMOVED FOR JUNCTION BOX MODIFICATION SHALL BE REPLACED IN-KIND.

4. CONTRACTOR SHALL ALLOW FOR POSTAL DELIVERY AT ALL TIMES. ANY MAILBOXES MOVED OR DAMAGED SHALL BE REPLACED IN KIND AT NO COST TO THE PARISH.

5. THE ALIGNMENT FOR EACH SHEET IS BASED ON AN ASSUMED COORDINATE SYSTEM.

6. THE LOCATION OF ALL UNDERGROUND UTILITIES SHOWN ON THE PLANS IS APPROXIMATE. PRIOR TO BEGINNING ANY CONSTRUCTION OR EXCAVATION, THE CONTRACTOR SHALL CONTACT THE VARIOUS UTILITY COMPANIES AND PHYSICALLY VERIFY THE EXACT LOCATION AND DEPTH OF ALL UNDERGROUND UTILITIES. THE CONTRACTOR SHALL BE HELD SOLELY RESPONSIBLE FOR ANY DAMAGE OR LIABILITY OCCASIONED BY HIS FAILURE TO COMPLY WITH THESE INSTRUCTIONS.

7. DURING CONSTRUCTION, NO BUSINESS OR RESIDENT SHALL HAVE THEIR ACCESS COMPLETELY BLOCKED. CONSTRUCTION SHALL BE PERFORMED SO AS TO ALLOW ACCESS AT ALL TIMES UNLESS SPECIAL APPROVAL IS GIVEN BY THE PROJECT ENGINEER.

8. ANY DRIVEWAY OR FENCE BROKEN DUE TO THE CONTRACTOR'S NEGLIGENCE, SHALL BE REPAIRED BY THE CONTRACTOR AT NO ADDITIONAL COST TO THE PARISH.

9. CONTRACTOR SHALL BE RESPONSIBLE FOR THE MAINTENANCE OF ALL TRAFFIC DURING CONSTRUCTION AND SHALL COMPLY WITH ALL REGULATIONS TO INSURE THE SAFETY OF THE WORKERS AND THE PUBLIC DURING ALL PHASES OF CONSTRUCTION. CONTRACTOR SHALL DEVELOP THE TRAFFIC CONTROL PLAN, CERTIFIED BY A REGISTERED PROFESSIONAL ENGINEER IN THE STATE OF LOUISIANA FOR THIS PROJECT.

10. NO WORK SHALL BE PERFORMED ON WEEKENDS OR ON PARISH HOLIDAYS, UNLESS THE CONTRACTOR GIVES 48 HOURS WRITTEN NOTICE TO THE PROJECT ENGINEER AND RECEIVES HIS APPROVAL.

11. ALL GRASS AREAS DISTURBED BY CONSTRUCTION SHALL BE REGRADED TO DRAIN, ALLOWED TO SET UP AND SETTLE, THEN FERTILIZED & SEEDED PER LADOTD REQUIREMENTS.

12. SIDE SLOPE, CANAL WIDTHS, AND ALIGNMENT MAY BE MODIFIED TO MATCH AND SUIT EXISTING CONDITIONS. THE CONTRACTOR WILL OBTAIN THE ENGINEER'S APPROVAL FOR ANY SUCH MODIFICATION.

13. CONTRACTOR SHALL BRACE ALL POWER AND UTILITY POLES, FENCE POSTS, AND OTHER STRUCTURES IN THE VICINITY OF THE CONSTRUCTION WORK FOR SAFETY AND TO PREVENT DAMAGE.

14. CONTRACTOR SHALL PROVIDE TEMPORARY PUMPING CAPABILITY DURING CONSTRUCTION.

LEGEND:

CONTROL POINT
PAVEMENT EDGE
GUARDRAIL TOP
HIGH BANK
WATER'S EDGE
BOX CULVERT
PIPE CULVERT
CATCH BASIN TOP (ROUND)
DROP INLET TOP (ROUND)
DRAINAGE MANHOLE TOP
TREE
WOODS EDGE
TREE LINE
FENCE LINE —X——X—
GATE
PROPERTY CORNER
RIGHT OF WAY MONUMENT
SECTION CORNER
FENCE CORNER
TELEVISION CABLE —TV——TV—
TELEVISION PEDESTAL TV
POWER POLE
DEADMAN
POWER LINE —P——P—
POWER JUNCTION BOX P
POWER VAULT P
TRANSFORMER T
COMBINATION POLE
POWER DROP
PIPELINE —O——O—
PIPELINE VENT
PIPELINE REGULATOR DR
GAS WELL G
OIL WELL O

GAS LINE —G——G—
GAS METER
GAS VALVE H
GAS LINE/CASING —G——G—
GAS VENT
RAILROAD TRACK
RR TRAFFIC SIGNAL BOX SB
SEWER LINE —S——S—
SEWER MANHOLE TOP
SEWER BLOWOUT VALVE
SEWER CLEANOUT
SEPTIC TANK
SEWER PUMP (PRIVATE) SH
LIGHT POLE
LIGHT PEDESTAL
LIGHT POWER VAULT
TRAFFIC SIGN
TELEPHONE POLE
TELEPHONE LINE —T——T—
TELE CROSS CONNECT BOX TX
TELEPHONE PEDESTAL
TELEPHONE PRESSURE BOX
WATER LINE —W——W—
WATER LINE/CASING —W——W—
WATER CLEANOUT W
WATER METER
WATER VALVE
WATER VALVE VAULT
WATER WELL
FIRE HYDRANT
BILLBOARD
POST
SIGN POST
MAILBOX MB
ORNAMENTAL LIGHT
CANOPY SUPPORT

CMP	CORRUGATED METAL PIPE
CMPA	CORRUGATED METAL PIPE ARCH
PVC	POLYVINYL CHLORIDE PIPE
RCB	REINFORCED CONCRETE BOX
RCP	REINFORCED CONCRETE PIPE

STATE OF LOUISIANA
BRIAN D. NUNES
License No. 33756
PROFESSIONAL ENGINEER

DATE	DESCRIPTION	BY

REVISIONS

GENERAL NOTES AND LEGEND

HOMEWOOD DRAINAGE IMPROVEMENTS

SHREAD - KUYRKENDALL & ASSOC.
ENGINEERS - SURVEYORS - PLANNERS
BATON ROUGE, LOUISIANA

DESIGNED	DRAWN	CHECKED	APPROVED
B.D.N.	J.E.P.	R.W.M.	

PARISH	SHEET NO.
ST. JOHN	2a

N

0 200 400
SCALE IN FEET

STATE OF LOUISIANA
BRIAN D. NUNES
License No. 33756
PROFESSIONAL ENGINEER
CIVIL ENGINEERING

SITEPLAN

HOMEWOOD DRAINAGE IMPROVEMENTS

SHREAD - KUYRKENDALL & ASSOC.
ENGINEERS - SURVEYORS - PLANNERS
BATON ROUGE, LOUISIANA

DATE	DESCRIPTION	BY

REVISIONS

DESIGNED	DRAWN	CHECKED	APPROVED
B.D.N.	J.E.P.	R.W.M.	

S:\CADD\89091\89091SK\SITEPLAN.DGN

PARISH	SHEET NO.
ST. JOHN	3

SCALE: 1" = 20'

STA. 0+00.00
BEGIN BASELINE

STA. 3+99.02
END BASELINE

188'-0"

123'-0"

N0°0'0"W

N5°2'58"W

PROPOSED NEW BERM FOR PUMPS (FILL MATERIAL FROM EXCAVATED EXISTING BERM) (20'x60') (SEE SHT. 4)

STA. 3+20.00 TOP OF PROPOSED BERM

REQ'D. DRAINAGE EXCAVATION (CONNECT TOP OF EXISTING CANAL)

RELOCATED 48" BY-PASS PIPE WITH CHECK VALVE

RESERVE RELIEF CANAL

REQ'D. 42" STEEL DISCHARGE PUMP/PIPE

RELOCATED EXIST. PUMP/PIPE

HEADWALL PENETRATION (SEE DETAIL SHEET 5)

REQ'D. 72" STEEL PIPE (VIA JACK AND BORE) (128'-0")

EXIST. 48" BYPASS PIPE

EXIST. 42" PUMP/PIPE

EXIST. BERM APPROX. 30'

EXIST. JUNCTION BOX (TO BE MODIFIED) (SEE DETAILS ON SHEET. 6)

EXIST. 6'x6' RCB

STA. 1+33.86 EDGE OF PAVEMENT

TIE TO EXISTING

+20.00 28.58' RT.

+10.00 25' RT.

REQ'D. 15'x30' CONC. PAD FOR ENGINES

REQ'D. 8' CHAIN LINK FENCE (DETAIL SHEET 7)

EXIST. CHAIN LINK FENCE AND CONC. SLAB TO BE REMOVED

REQ'D. ACCESS ROAD (LIMESTONE) (12'x22') (DEATIL SHEET 7)

AIRLINE HWY.

EDGE OF PAVEMENT

FIRE HYDRANT

CANOPY

POWER POLE

PROJ. ℄

WATER VALVE

39.27'

29.28'

32.39'

STA. 0+00

0+00 1+00 2+00 3+00

✱ SUPPORTS AND MISCELLANEOUS DETAILS NOT SHOWN FOR CLARITY.

REQ'D. 42" STEEL DISCHARGE PUMP/PIPE

TOP OF BERM EL. 5.50

PROPOSED BERM

RELOCATED 48" BY-PASS PIPE WITH CHECK VALVE

EXIST. JUNCTION BOX

REQ'D. 72" STEEL PIPE (VIA JACK AND BORE)

EXIST. GRADE

EXIST. 87"x63" CMPA

EXIST. 6'x6' RCB

REQ'D. DRAINAGE EXCAVATION

INV. (-)3.50

TIE TO EXISTING GRADE

INV. (-)3.45

INV. (-)3.66

INV. (-)2.86

INV. (-)2.91

INV. (-)3.93

INV. (-)4.00

INV. (-)7.00

EL. (-)9.00

EL. (-)5.50

REQ'D. 2' THICK RIPRAP (TYP.)

10 8 6 4 2 0 -2 -4 -6 -8 -10

STATE OF LOUISIANA
BRIAN D. NUNES
License No. 33756
PROFESSIONAL ENGINEER
5/21

SHREAD & KUYKENDALL & ASSOC.
CONSULTING ENGINEERS & PLANNERS
BATON ROUGE, LOUISIANA

SURVEY | CHECKED B.D.N. | DETAILED J.E.P. | GRAPHICS AREA | FILENAME

PARISH	SHEET NO.
ST. JOHN	4

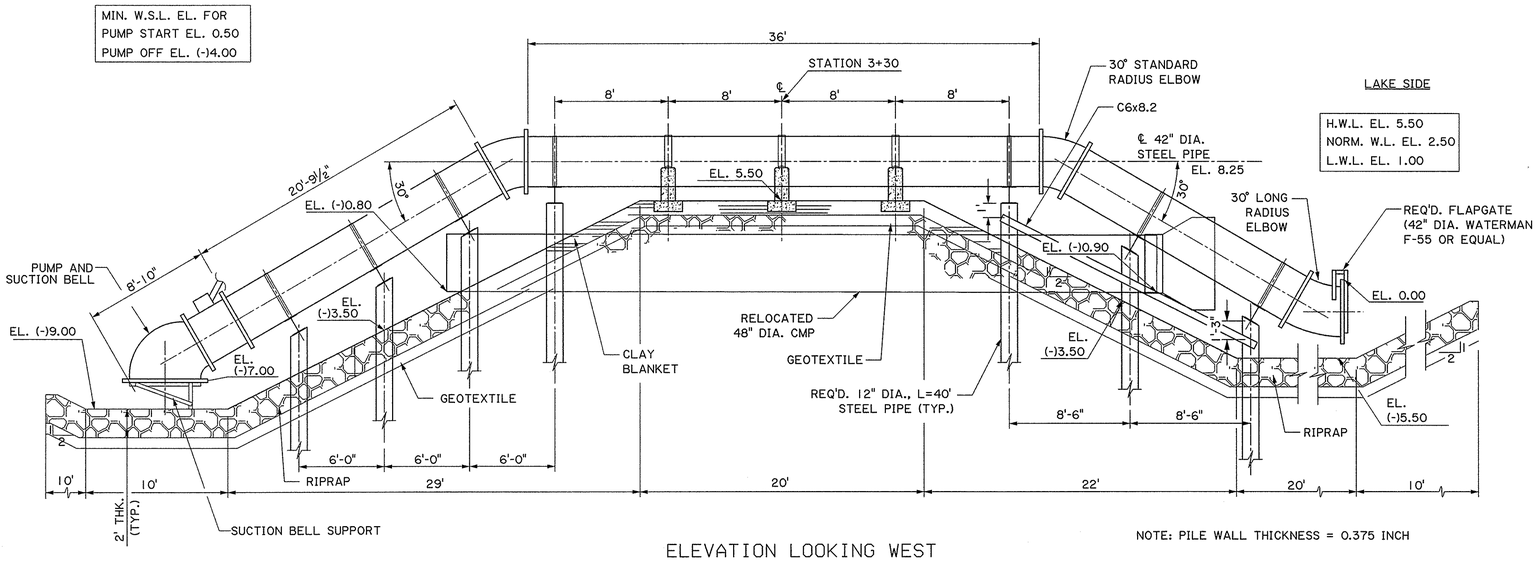

NOTE: PILE WALL THICKNESS = 0.375 INCH

ELEVATION LOOKING WEST
(REQUIRED NEW PUMP/PIPE AND RELOCATED BYPASS PIPE)

SCALE: 1"=5'

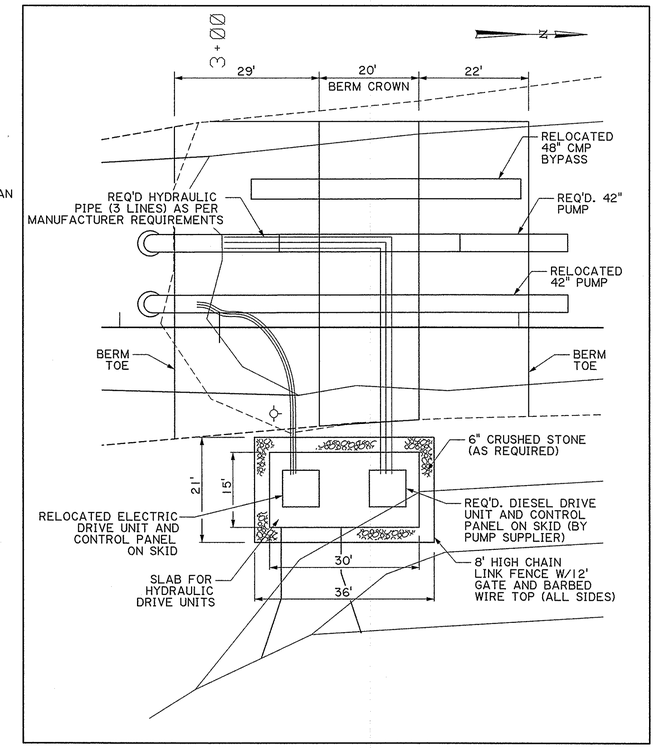

LAYOUT PLAN

N.T.S.

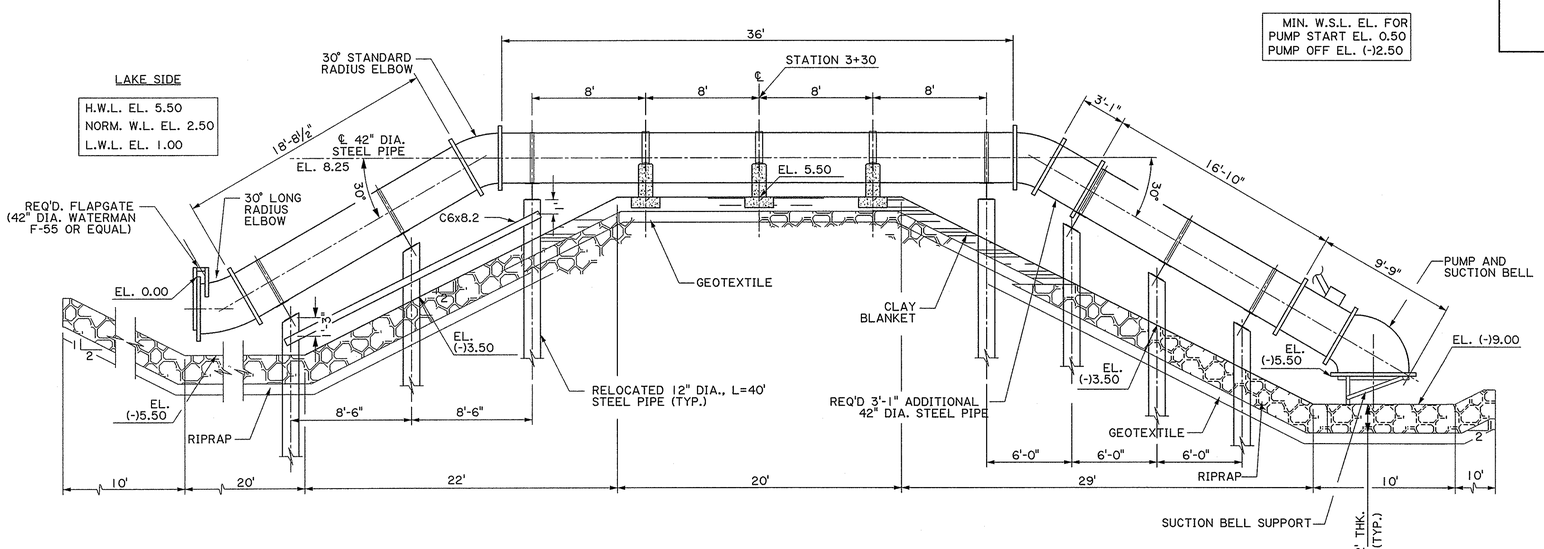

NOTE: PILE WALL THICKNESS = 0.375 INCH

NOTE: RELOCATED PUMP INCLUDES A 3'-1" ADDITION TO THE INTAKE AS WELL AS AN ADDITIONAL STEEL PIPE SUPPORT ON THE INTAKE SIDE.

ELEVATION LOOKING EAST
(RELOCATED EXISTING PUMP/PIPE)

SCALE: 1"=5'

STATE OF LOUISIANA
BRIAN D. NUNES
License No. 33756
PROFESSIONAL ENGINEER
5/5/11

DATE	DESCRIPTION	BY
	REVISIONS	

PROPOSED BERM ELEVATIONS

HOMEWOOD DRAINAGE IMPROVEMENTS

SHREAD - KUYRKENDALL & ASSOC.
ENGINEERS - SURVEYORS - PLANNERS
BATON ROUGE, LOUISIANA

DESIGNED	DRAWN	CHECKED	APPROVED
B.D.N.	J.E.P.	R.W.M.	

S:\CADD\85091\85091-9K\BERM_ELEVATIONS.DGN

PARISH	SHEET NO.
ST. JOHN	5

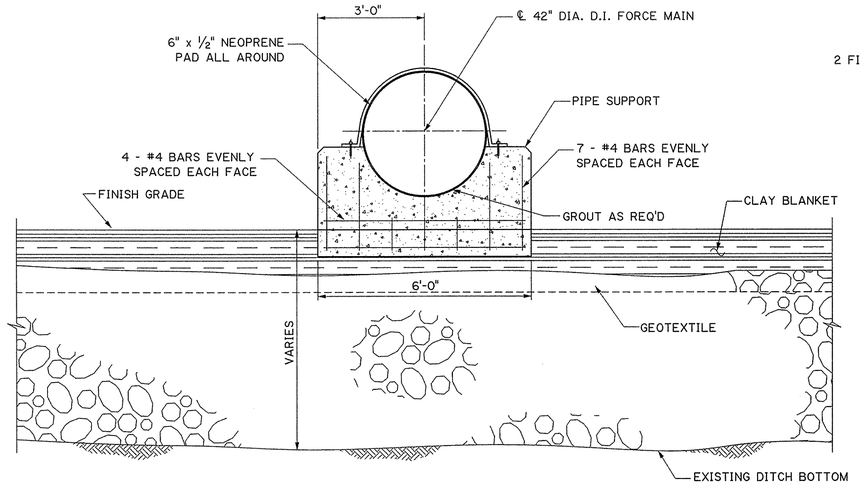

SECTION OF 42" DIA. DISCHARGE PIPE & SUPPORT (A THIS SHT.)

N.T.S.

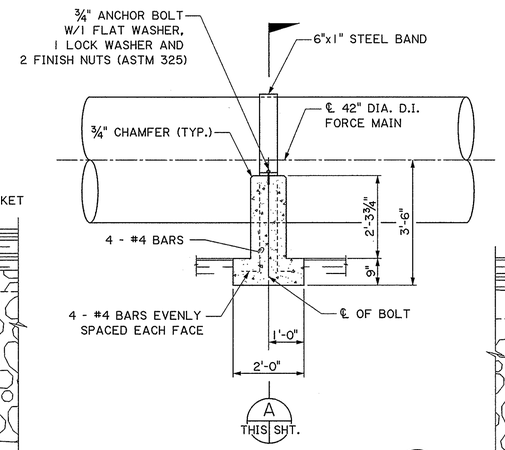

PIPE SUPPORT DETAILS (1 THIS SHT.)

N.T.S.

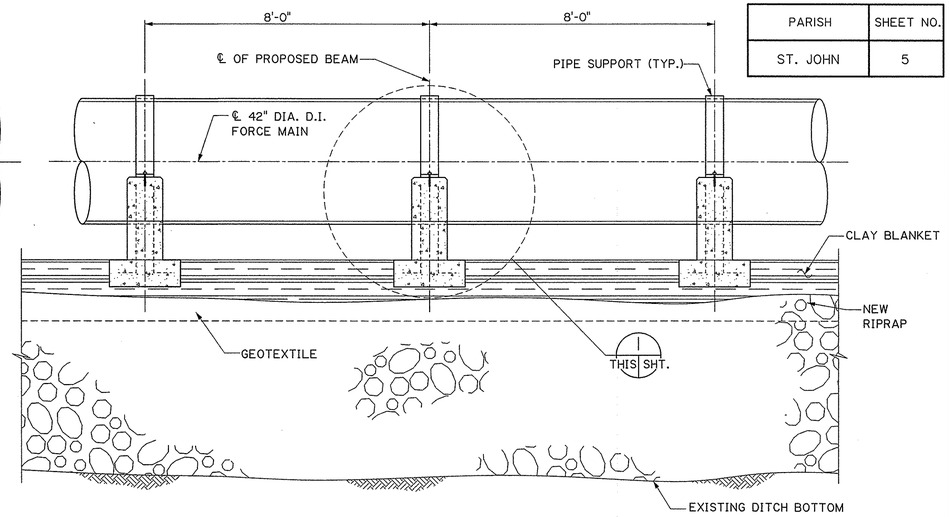

DISCHARGE PIPE SUPPORT

N.T.S.

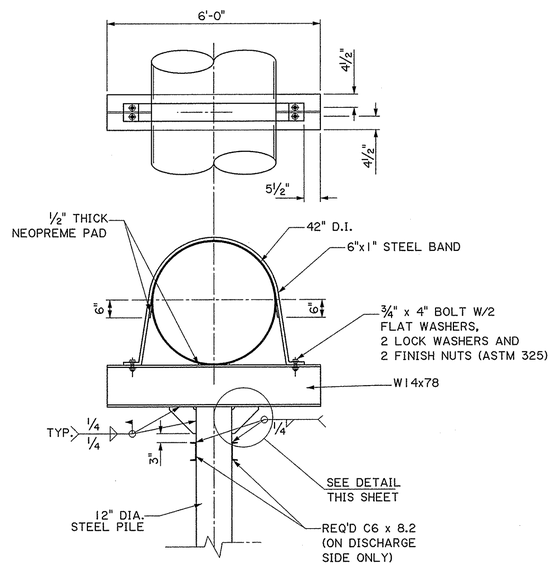

DISCHARGE PIPE PILE BENT

SCALE: 1/2" = 1'-0"

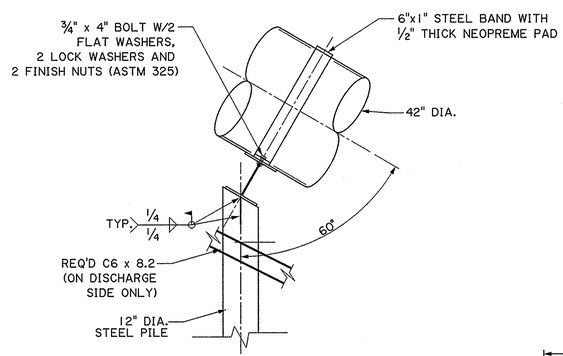

INCLINED DISCHARGE PIPE PILE BENT

SCALE: 1/2" = 1'-0"

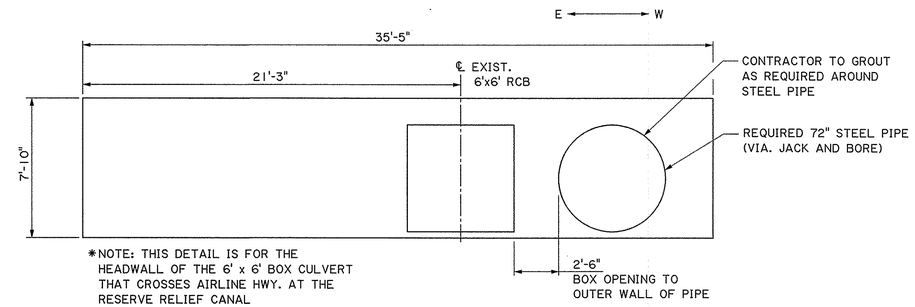

*NOTE: THIS DETAIL IS FOR THE HEADWALL OF THE 6' x 6' BOX CULVERT THAT CROSSES AIRLINE HWY. AT THE RESERVE RELIEF CANAL

HEADWALL PENETRATION DETAIL (LOOKING SOUTH)

SCALE: 1/4" = 1'-0"

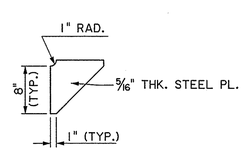

GUSSET DETAIL

SCALE: 1" = 1'-0"

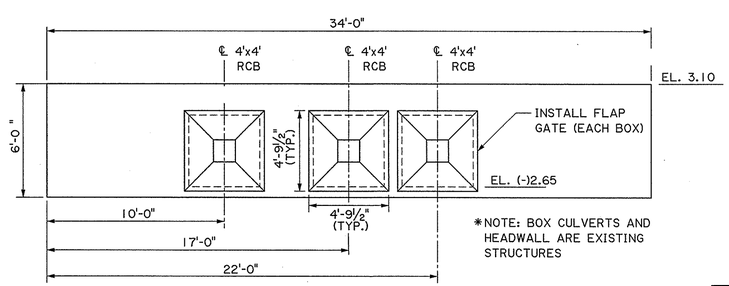

*NOTE: BOX CULVERTS AND HEADWALL ARE EXISTING STRUCTURES

HIGHWAY CULVERT CROSSING AT TROSSCLAIR CANAL NORTH SIDE OF AIRLINE HIGHWAY (LOOKING SOUTH)

SCALE: 1/4" = 1'-0"

STATE OF LOUISIANA
BRIAN D. NUNES
License No. 33756
PROFESSIONAL ENGINEER

NOTE:

1. ALL HARDWARE TO BE GALVANIZED (CLASS II - TYP.).
2. USE BRASS SHIMS AS NECESSARY UNDER PIPES AT SUPPORT TO MAINTAIN ALIGNMENT.
3. ALL CONCRETE TO BE 3000 PSI @ 28 DAYS.

DATE	DESCRIPTION	BY
	REVISIONS	

DETAILS

HOMEWOOD DRAINAGE IMPROVEMENTS

SHREAD - KUYRKENDALL & ASSOC.
ENGINEERS - SURVEYORS - PLANNERS
BATON ROUGE, LOUISIANA

DESIGNED	DRAWN	CHECKED	APPROVED
B.D.N.	J.E.P.	R.W.M.	

S:\CADD\8909\8909L9K\DTLS-1.DGN

PARISH	SHEET NO.
ST. JOHN	6

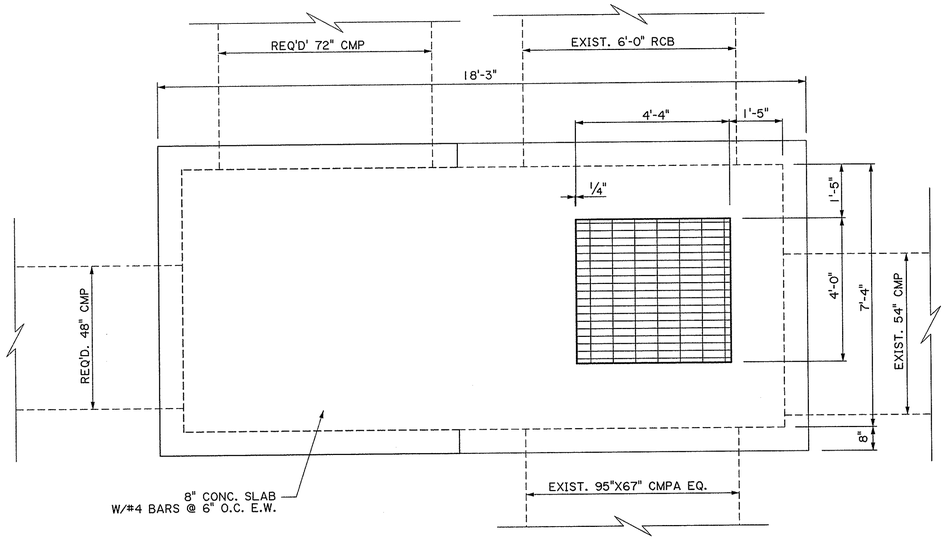

TOP PLAN
SCALE: 1"=2'

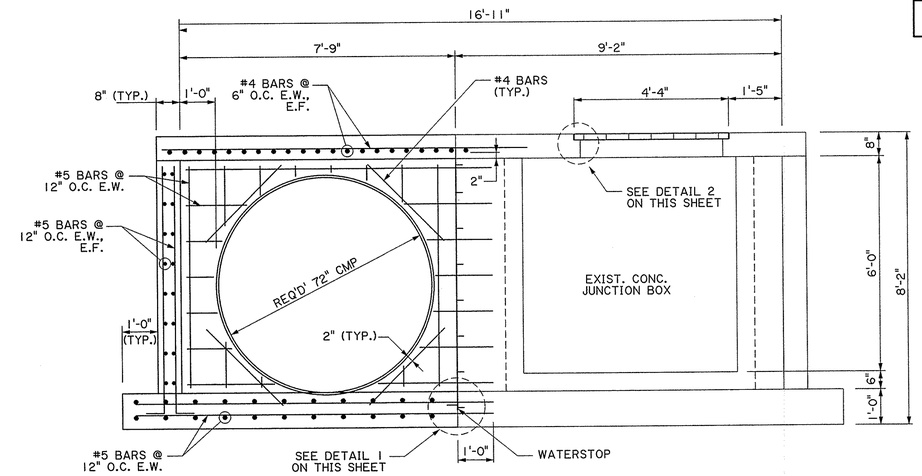

SECTION A
SCALE: 1"=2' THIS SHT.

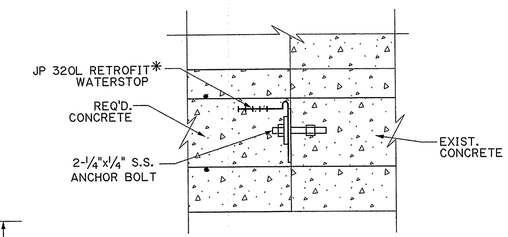

* TO BE INSTALLED ACCORDING TO MANUFACTURERS SPECIFICATIONS.

DETAIL 1
N.T.S. THIS SHT.

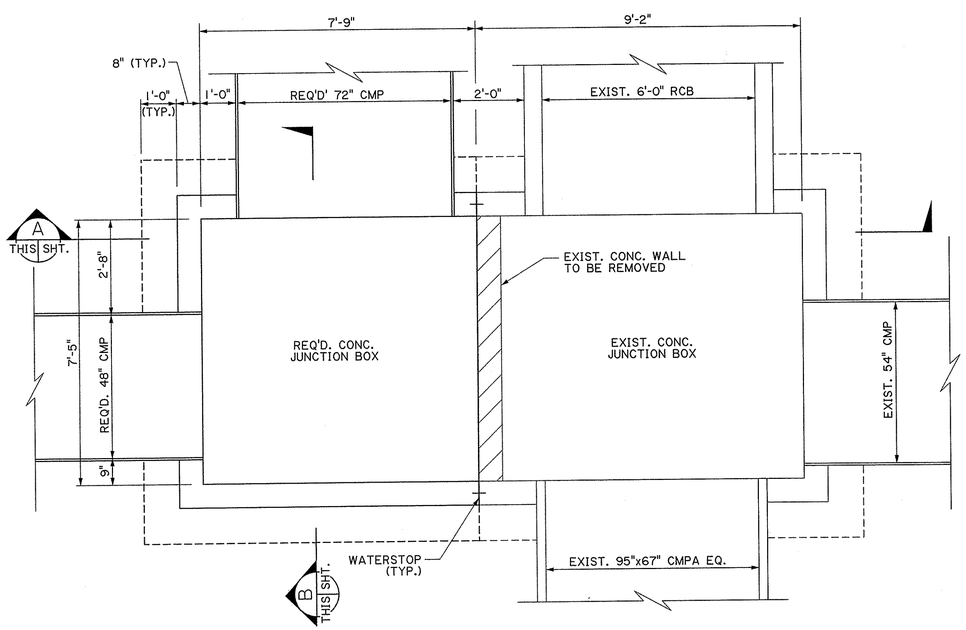

FOUNDATION PLAN
SCALE: 1"=2'

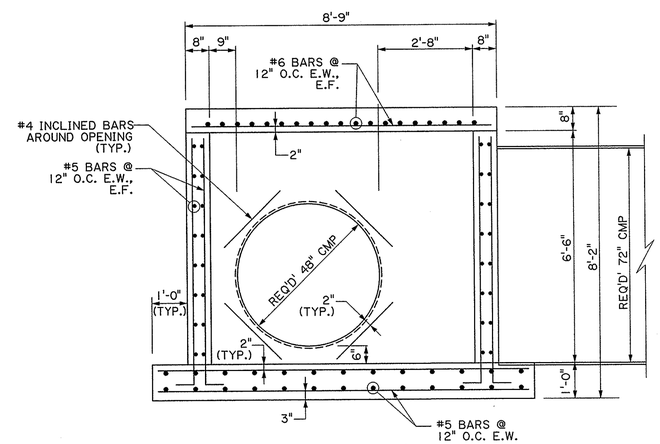

SECTION B
SCALE: 1"=2' THIS SHT.

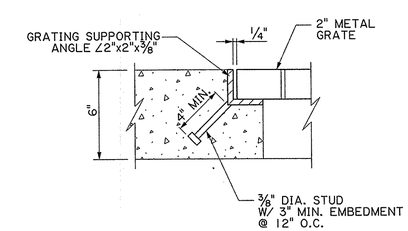

DETAIL 2
N.T.S. THIS SHT.

STATE OF LOUISIANA
BRIAN D. NUNES
License No. 33756
PROFESSIONAL ENGINEER

NOTES:
1. ALL CONCRETE TO BE 4000 PSI @ 28 DAYS.
2. ALL REINFORCING STEEL SHALL BE GRADE 60.

DATE	DESCRIPTION	BY

REVISIONS

DETAILS

HOMEWOOD DRAINAGE IMPROVEMENTS

SHREAD - KUYRKENDALL & ASSOC.
ENGINEERS - SURVEYORS - PLANNERS
BATON ROUGE, LOUISIANA

DESIGNED	DRAWN	CHECKED	APPROVED
B.D.N.	J.E.P.	R.W.M.	

S:\CADD\89091\89091PK\DTLS-2.DGN

PARISH	SHEET NO.
ST. JOHN	7

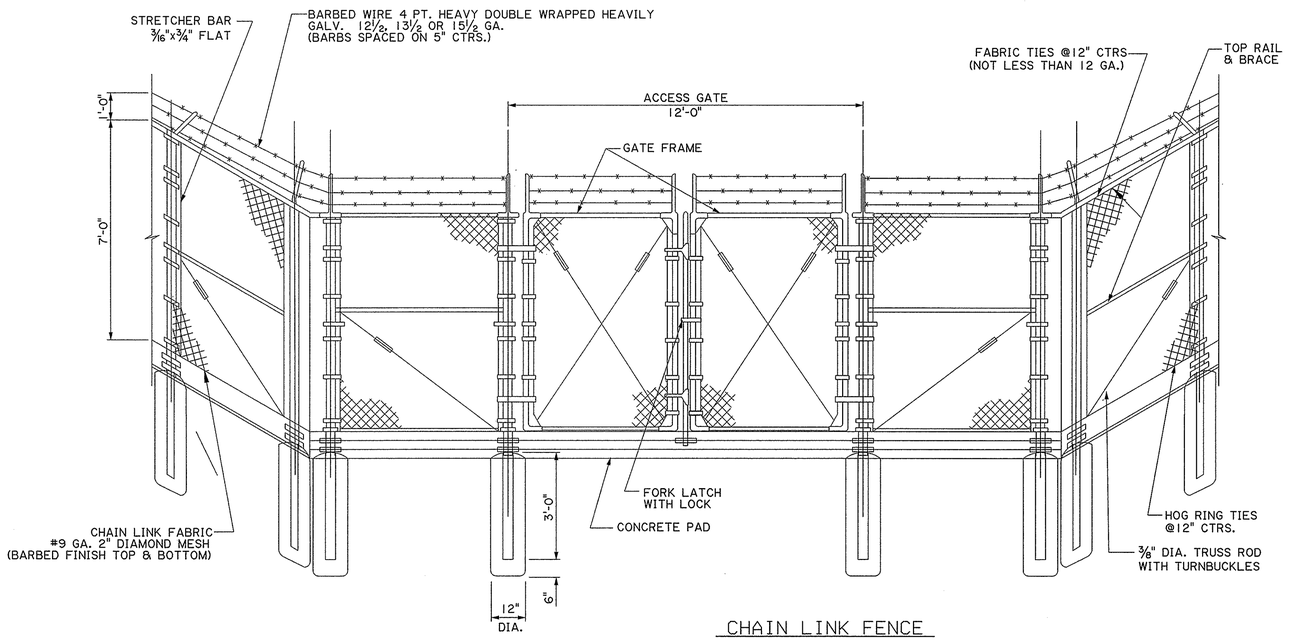

CHAIN LINK FENCE

N.T.S.

	SECTION	OUTSIDE DIA. (INCHES)
LINE POST	Round	2 3/8
BRACE RAIL	Round	1 5/8
COR. POST	Round	2 7/8
GATE POST	Round	4.0
GATE FRAME	Round	1 7/8

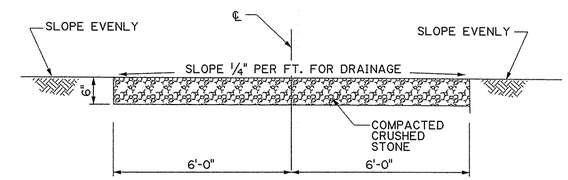

NEW ACCESS ROAD

N.T.S.

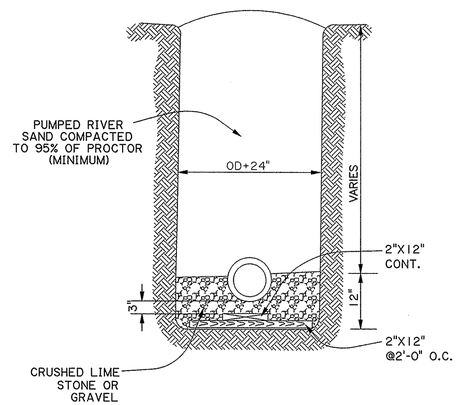

SEWER LINE BEDDING DETAIL

N.T.S.

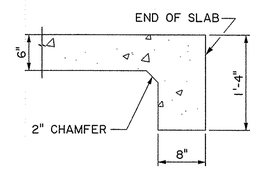

DETAIL

SCALE: 1" = 1'-0"

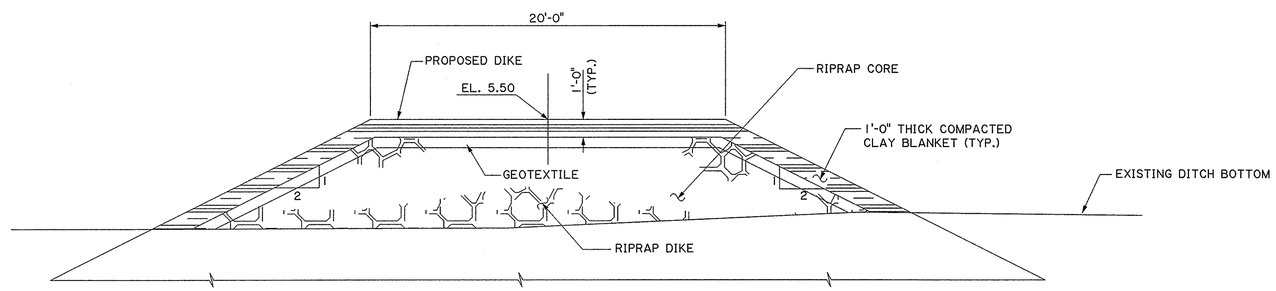

CLAY BLANKET DETAIL

SCALE: 1/4" = 1'-0"

NOTE:

1. ALL HARDWARE TO BE GALVANIZED (CLASS II - TYP.)
2. USE BRASS SHIMS AS NECESSARY UNDER PIPES AT SUPPORT TO MAINTAIN ALIGNMENT
3. ALL CONCRETE TO BE 3000 PSI @ 28 DAYS.
4. CONTRACTOR SHALL DEPOSIT SUFFICIENT SATISFACTORY FINER MATERIAL TO ENSURE FILLING THE VOIDS IN THE RIPRAP TO PERMIT COMPACTING THE CLAY BLANKET.

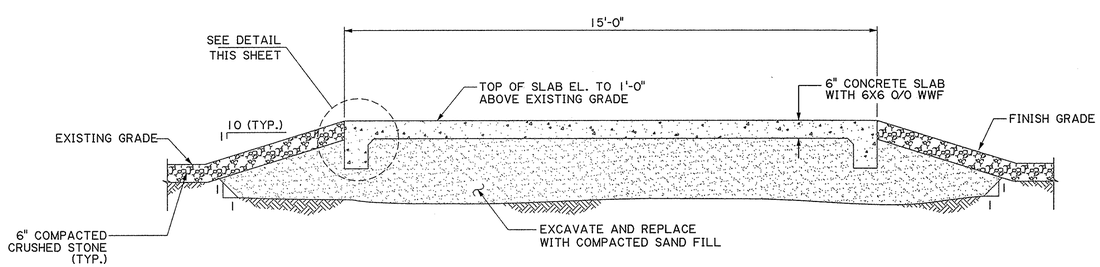

SECTION OF SLAB FOR HYDRAULIC DRIVE UNIT

SCALE: 1/2" = 1'-0"

STATE OF LOUISIANA
BRIAN D. NUNES
License No. 33756
PROFESSIONAL ENGINEER
REGISTERED PROFESSIONAL ENGINEER

DATE	DESCRIPTION	BY
	REVISIONS	

DETAILS

HOMEWOOD DRAINAGE IMPROVEMENTS

SHREAD - KUYRKENDALL & ASSOC.
ENGINEERS - SURVEYORS - PLANNERS
BATON ROUGE, LOUISIANA

DESIGNED	DRAWN	CHECKED	APPROVED
B.D.N.	J.E.P.	R.W.M.	

S:\CADD\89091\89091SK\DTLS-3.DGN

F.A.P.	STATE PROJECT	PARISH	SHEET NO.
		ST. JOHN	8

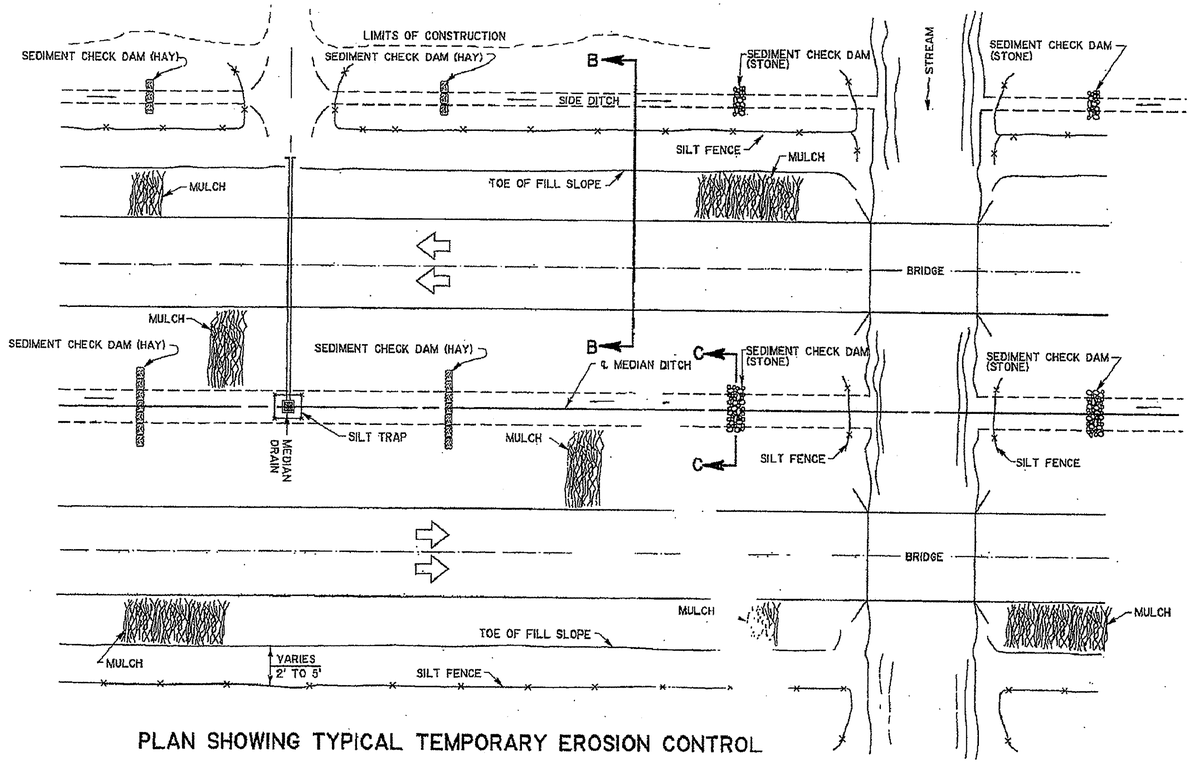

PLAN SHOWING TYPICAL TEMPORARY EROSION CONTROL

MULCHES

Mulches are the application of mats of material placed on the soil surface to prevent erosion by protecting the soil surface from raindrop impact and to reduce the velocity of overland flow. Mulches can be organic or synthetic. Mulches shall be in accordance with subsection 1018.19 of the LA DOTD Standard Specifications. A few guidelines for the use of Mulches are:

1. Use on cut and embankment slopes which have not been completed to plan grade or where the weather or soil conditions will not permit completing them within a reasonable time;
2. Use on cleared , grubbed, and scalped areas where soil erosion is likely to occur;
3. Use with temporary seeding.

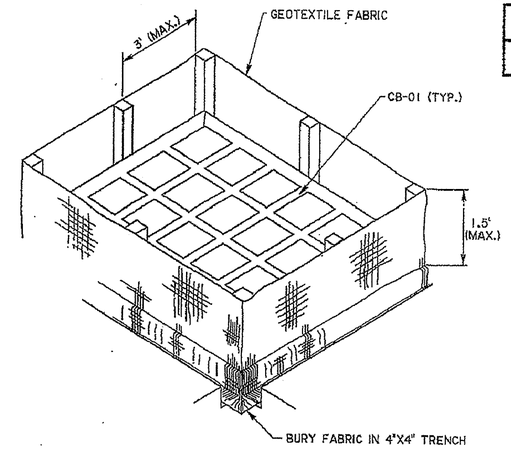

ISOMETRIC VIEW SHOWING GEOTEXTILE FABRIC

(BACKFILL SOIL NOT SHOWN)

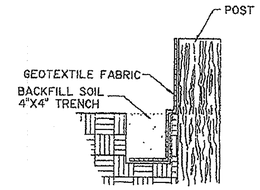

SECTION THRU TRENCH SHOWING GEOTEXTILE FABRIC

NOTES:

The temporary drop inlet silt trap is to be used for small drainage areas (less than 1 acre) where the storm drain is functional before the area is stabilized. The trap can be either geotextile fabric or hay bales.

1. The geotextile fabric shall conform to Section 1019 (Type G) of the LA DOTD Standard Specifications.
2. Wooden stakes supporting the fabric shall be 2" x 2" or 2" x 4" with a minimum length of 3 feet. The stakes shall be spaced around the inlet at a maximum spacing of 3 feet.
3. The height of the fabric above the inlet shall be limited to 1.5' and the bottom of the fabric shall be buried in a trench approximately 4" wide by 4" deep. The fabric shall be stapled to the post with 1/2" staples.
4. The trap should be inspected regularly and after each storm. The sediment should be removed and make sure each stake is firmly in the ground.

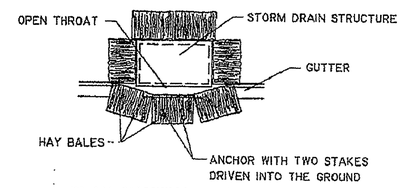

PLAN SHOWING HAY BALES

PAY ITEM: 204(02), TEMPORARY BALED HAY OR STRAW

TEMPORARY INLET SILT TRAP

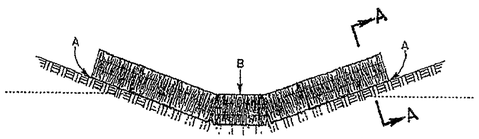

POINTS A SHOULD BE HIGHER THAN POINT B.

ELEVATION

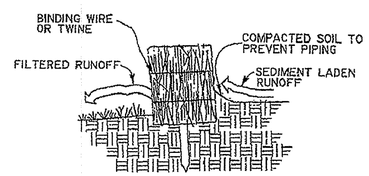

SECTION A-A

TEMPORARY SEDIMENT CHECK DAM (HAY)

PAY ITEM: 204(05)(A), TEMPORARY SEDIMENT CHECK DAM (HAY)

NOTES:

A hay bale barrier is a temporary sediment barrier consisting of a row of entrenched and anchored bales of straw or hay. The hay bale barrier is also used as a check dam to reduce the velocity in small ditches or swales. The hay bales shall be in accordance with LA DOTD Standard Specifications, Section 204. A few basic design guidelines for the use of a Hay Bale Barrier are:

1. Use where erosion would occur in the form of sheet and rill erosion;
2. Use in minor swales or ditches where the maximum drainage area is 2 acres;
3. Only use where the effectiveness is required for less than 3 months;
4. Do not use in live streams or in swales or ditches where there is a possibility of a washout.

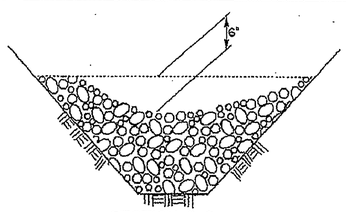

SECTION C-C

TEMPORARY SEDIMENT CHECK DAM (STONE)

PAY ITEM: 204(05)(B), TEMPORARY SEDIMENT CHECK DAM (STONE)

NOTES:

A stone check dam is a small temporary dam constructed across a swale or drainage ditch. The purpose of this measure is to reduce the velocity of concentrated stormwater flows, thereby reducing erosion of the swale or ditch. The stone check dam will trap small amounts of sediments generated in the ditch itself, however it should not be used as a sediment trapping device. A few basic design guidelines for the use of Stone Check Dams are:

1. Use in small open channels which drain 10 acres or less;
2. Do not use in a live stream;
3. Use in a temporary ditch or swale which, because of their short length of service, cannot receive a non-erodible lining;
4. Use in permanent ditches or swales which will not receive a permanent lining for an extended period of time;
5. Use in temporary or permanent ditches or swales which need protection during the establishment of grass linings.
6. For stone specifications see subsection 711.02(a)(Class 2LB.) of the LA DOTD Standard Specifications.

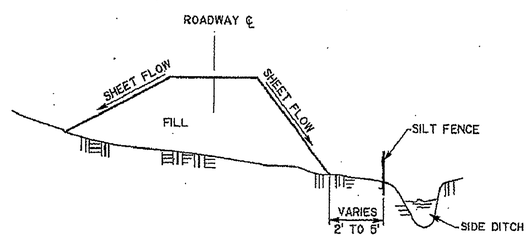

SECTION B-B

TEMPORARY SILT FENCE APPLICATION

(FOR CONSTRUCTION DETAILS AND SPECIFICATIONS SEE SHEET 2 OF 2.)

DATE	DESCRIPTION	BY

REVISIONS

Jack C. Morris

STANDARD PLAN NO. EC-01 SHEET 1 of 2

TEMPORARY EROSION CONTROL DETAILS

DATED January 14, 1994

STATE OF LOUISIANA
DEPARTMENT OF TRANSPORTATION AND DEVELOPMENT

DESIGNED JCM | DETAILED KAJ | DR. cadd/dgn/stdplans
CHECKED | CHECKED JCM | FILENAME ec01.dgn

Approved By Chief Engineer (ACTING) Nowal Khazen Date 1-14-94

F.A.P.	STATE PROJECT	PARISH	SHEET NO.
		ST. JOHN	9

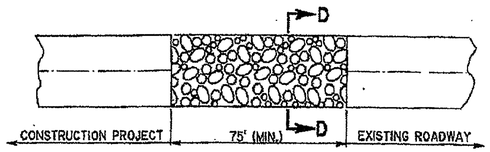

PLAN

SECTION D-D

TEMPORARY STONE CONSTRUCTION ENTRANCE

PAY AS "S - ITEM", TEMPORARY STONE CONSTRUCTION ENTRANCE

NOTES:

TEMPORARY STONE CONSTRUCTION ENTRANCE AND/OR WASH RACK

A stone stabilized pad located at points of vehicular ingress and egress on the construction site to reduce the amount of mud transported onto public roads. If the action of the vehicle traveling over the gravel pad is not sufficient to remove the majority of the mud, then the tires must be washed before the vehicle enters a public road. A few basic design guidelines for the use of a Stone Construction Entrance and/or Wash Racks are:

1. The stone layer must be at least 6 inches thick;
2. The stone shall conform to Section 711(02)(Class 2LB) of the LA DOTD Standard Specifications;
3. The length of the pad must be at least 75 feet and it must extend the full width of the vehicular ingress and egress;
4. A geotextile fabric underliner is required. The geotextile fabric shall be in accordance with Section 1019 (Type D); of the LA DOTD Standard Specifications;
5. If a wash rack is necessary, provisions must be made to intercept the wash water and trap the sediment before it is carried off-site.

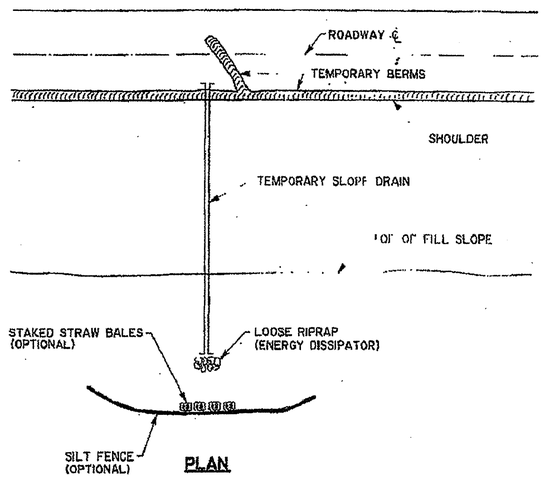

PLAN

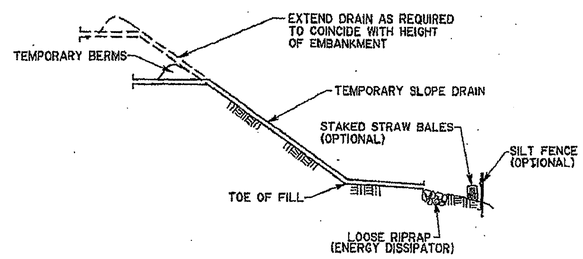

ELEVATION

TEMPORARY SLOPE DRAIN

NOTES:

A temporary slope drain is a device used to carry water from the construction work area to a lower elevation. Slope drains may be plastic sheets, metal or plastic pipe, stone gutters, fiber mats, or concrete or asphalt ditches. A few basic design guidelines for the use of a Temporary Slope Drain are:

1. The spacing of the slope drains varies with the road grade.
   For Grades: 0.0% - 2.0% use 500' spacing
   2.1% - 5.0% use 200' "
   Greater than 5.0% use 100' "
2. Slope drain material: Smooth pipe - 8" minimum
   Corrugated pipe - 12" minimum
   Plastic sheeting - 4' wide minimum
   " - 3 mils thick min.
3. Plastic sheeting can be staked down or weighted with rocks or bags. The area under the sheeting should be shaped to provide an adequate channel.
4. The outlet end should be protected or have some means of dissipating energy. The flow should be directed through a sediment trap such as a silt fence or hay bales.
5. To insure proper operation, temporary slope drains should be inspected regularly and after each storm, for clogging or displacement. Erosion at the outlet should be checked and the silt traps cleaned if necessary.

1. SET POSTS AND EXCAVATE A 4" X 4" TRENCH UPSLOPE ALONG THE LINE OF POSTS.

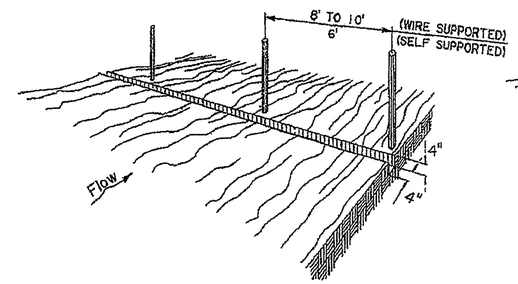

2. STAPLE WIRE FENCING TO THE POSTS.

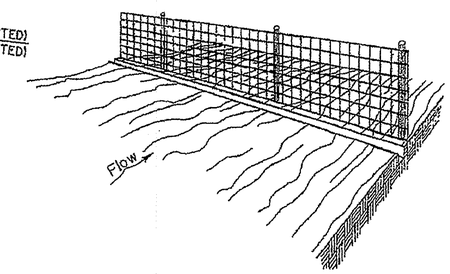

3. ATTACH THE FILTER FABRIC TO THE WIRE FENCE AND EXTEND IT INTO THE TRENCH.

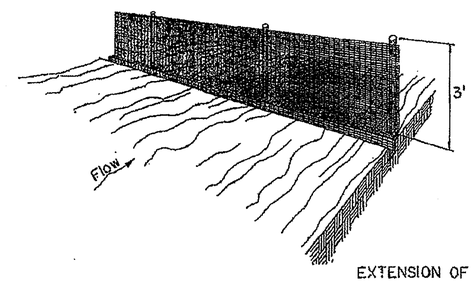

4. BACKFILL AND COMPACT EXCAVATED SOIL.

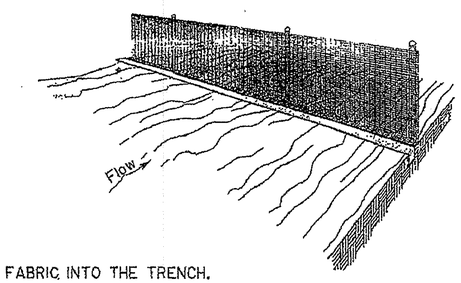

EXTENSION OF FABRIC INTO THE TRENCH.

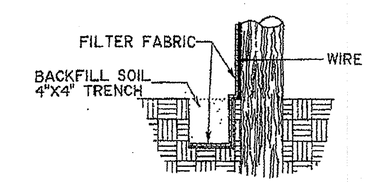

CONSTRUCTION OF TEMPORARY SILT FENCING

(WIRE SUPPORTED SILT FENCE IS SHOWN. SELF SUPPORTED SILT FENCE WILL BE CONSTRUCTED ACCORDING TO MANUFACTURERS SPECIFICATIONS.)

NOTES:

Silt fencing is a temporary sediment barrier consisting of a filter fabric supported by post and stretched across an area to intercept and detain small amounts of sediment. The silt fencing shall be in accordance with Section 204 of the LA DOTD Standard Specifications. A few basic guidelines for the use of Silt Fencing are:

1. Use where erosion would occur in the form of sheet and rill erosion;
2. Use where the maximum drainage area behind the silt fence is 1/4 acre per 100 feet of silt fence length;
3. Use where the maximum slope length behind the barrier is 100 feet;
4. Use where the maximum gradient behind the barrier is 2:1;
5. Do not use silt fences in live streams or in ditches or swales where flows exceed one cubic foot per second.

Jack C. Manno

DATE	DESCRIPTION	BY

REVISIONS

STANDARD PLAN NO. EC-01 SHEET 2 OF 2

CONTROL DETAILS

DATED January 14, 1994

STATE OF LOUISIANA
DEPARTMENT OF TRANSPORTATION AND DEVELOPMENT

DESIGNED JCM	DETAILED KAJ	DIR. /cadd/dgn/stdplans
CHECKED	CHECKED JCM	FILENAME ec01.dgn
Approved By Chief Engineer (ACTING) Howard Prince		Date 1/14/94

23-APR-2007 15:45

GENERAL PROVISIONS

- All Temporary Traffic Control Devices used shall be in accordance with the LaDOTD Standard Specifications for Roads and Bridges, the Manual on Uniform Traffic Control Devices (MUTCD), and shall meet the National Cooperative Highway Research Program (NCHRP) 350 for Test Level 3 requirements.
- Materials used for Temporary Traffic Controls shall be in accordance with the LaDOTD Standard Specifications for Roads and Bridges and when applicable the LaDOTD Qualified Products List (QPL).
- No temporary traffic controls shall be erected without the approval of the Project Engineer and until work is about to begin, unless they are covered.
- No lane closures, lane shifts, diversions, or detours shall occur without the authorization of the Project Engineer.
- Responsibility is hereby placed upon the contractor for the installation, maintenance, and operation of all temporary traffic control devices called for in these plans or required by the Project Engineer for the protection of the traveling public as well as all Department and construction personnel.
- The contractor shall also be responsible for the maintenance of all permanent signs and pavement markings left in place as essential to the safe movement and guidance of traffic within the project limits.
- The District Traffic Operations Engineer (DTOE) shall serve as a technical advisor to the Project Engineer for all Traffic Control matters.
- "Road Work XX Miles" sign shall be required on all projects and located at begining of the project unless otherwise noted. The sign shall be a minimum 36"X60" unless otherwise noted.
- Warning signs used for lane closures or lane shifts in which the roadway shall be returned to full public use within 14 hours or less may be placed on NCHRP350 approved portable sign frames.

SPEED LIMITS

- Speed limits shall be lowered by 10 mph for any construction, maintenance, or utility operation that requires one or more of the following: (A) the condition of the original highway is degraded due to milled surfaces or uneven pavements; (B) work is in progress in the immediate vicinity of the travel way requiring lane closures, lane width reductions, or low speed diversions; (C) workers present on the shoulder within 2' of the edge of traveled way without barrier protection.
- The reduced speed zone shall only apply to those portions of the project limits affected. The Project Engineer may allow SPEED LIMIT WHEN FLASHING signs to supplement reduced speed zones.
- At the end of the reduced speed zone, a speed limit sign displaying the original speed limit before construction shall be installed.
- If conditions warrant, the District Traffic Operations Engineer may authorize the reduction of the speed limit by more than 10 mph.

PAVEMENT MARKINGS (see QPL)

- All pavement markings within the limits of the project that are in conflict with the project signing or the required traffic movements shall be removed from the pavement by blast cleaning or grinding (Existing striping shall not be painted over with black paint or covered with tape).
- If special pavement markings are needed, they shall be reflectorized, removable, and accompanied by the proper signage.
- Temporary Raised Pavement Markers (RPMs) may be added to supplement temporary striping in areas of transition, in tapers, in detours, and in other areas of need as directed by the Project Engineer.
- Materials and placement of temporary pavement markings shall conform to section 713 of the Standard Specifications. If no pay item exists, temporary markings will be considered incidental to traffic control.

SIGNS

- All signs used for temporary traffic controls shall follow the Department's Traffic Control (TC) details and the MUTCD. Signs shown in the TC illustrations are typical and may vary with each specific condition.
- More appropriate signing for a specific condition may be required or substituted with the approval of the Project Engineer and reviewed by the District Traffic Operations Engineer.
- When projects are separated by less than one mile, they shall be signed as one project.
- At no time shall signs warning against a particular operation be left in place once the operation has been completed or where the obstacle has been removed.
- Signs over 10 sq ft shall be mounted on two post and signs over 20 sq ft shall be mounted on at least three post.
- Signs shall have a minimum of two bolts per post.
- Permanent signs no longer applicable or in conflict shall be removed or covered with a strong, lightweight, opaque material.
- Warning signs used for temporary traffic controls shall meet the following guidelines unless otherwise noted in the plans: (A) size shall be 48" x 48", (B) see the Departments Standard Specifications and the QPL for sheeting information, (C) a minimum of a 2 lb U-Channel post may be used driven to a minimum depth of 3', (D) sign height shall be a minimum of 5' above the roadway surface unless there is a concern for pedestrians or bicycle traffic in which it shall be a minimum of 7', (E) lateral distance of signs shall be a minimum of 6' from the edge of shoulder or edge of pavement if no shoulder exist and 2' from the back of curb in urban areas.
- Vinyl Roll Up signs will be allowed for short term (less than 12 hours) daytime work provided that they meet all size, color, retroreflectivity requirements, and NCHRP 350.
- Mesh rollup signs shall not be allowed on any project.
- All signs shall be removed or covered when no longer applicable.
- Contractor shall use caution not to damage existing signs which remain in place. Any DOTD signs damaged by work operations shall be replaced.

CHANNELIZING DEVICES

- The following devices may be used: Tubular Markers, Vertical Panels, Cones, Drums, and Super Cones. Drums (at standard spacing) and Super Cones (at ½ standard spacing) are the only devices allowed to be used in taper areas on the interstate system during daylight hours. Only drums can be used in tapers during night operations.
- The spacing of channelizing devices in a taper should not exceed a distance in feet equal to 1.0 times the posted speed limit in mph (with a maximum of 50 feet).
- The spacing of channelizing devices in a tangent should not exceed a distance in feet equal to 2.0 times the posted speed limit in mph (with a maximum of 100 feet) unless otherwise noted.
- Retroreflective material pattern used on super cones shall match that used on drums.
- 28" traffic cones are not allowed on: 1) Interstates, 2) Highways with speeds greater than 40 mph. During night time operations: 1) 28" and 36" cones are not allowed, 2) drums are the only device allowed in the taper.

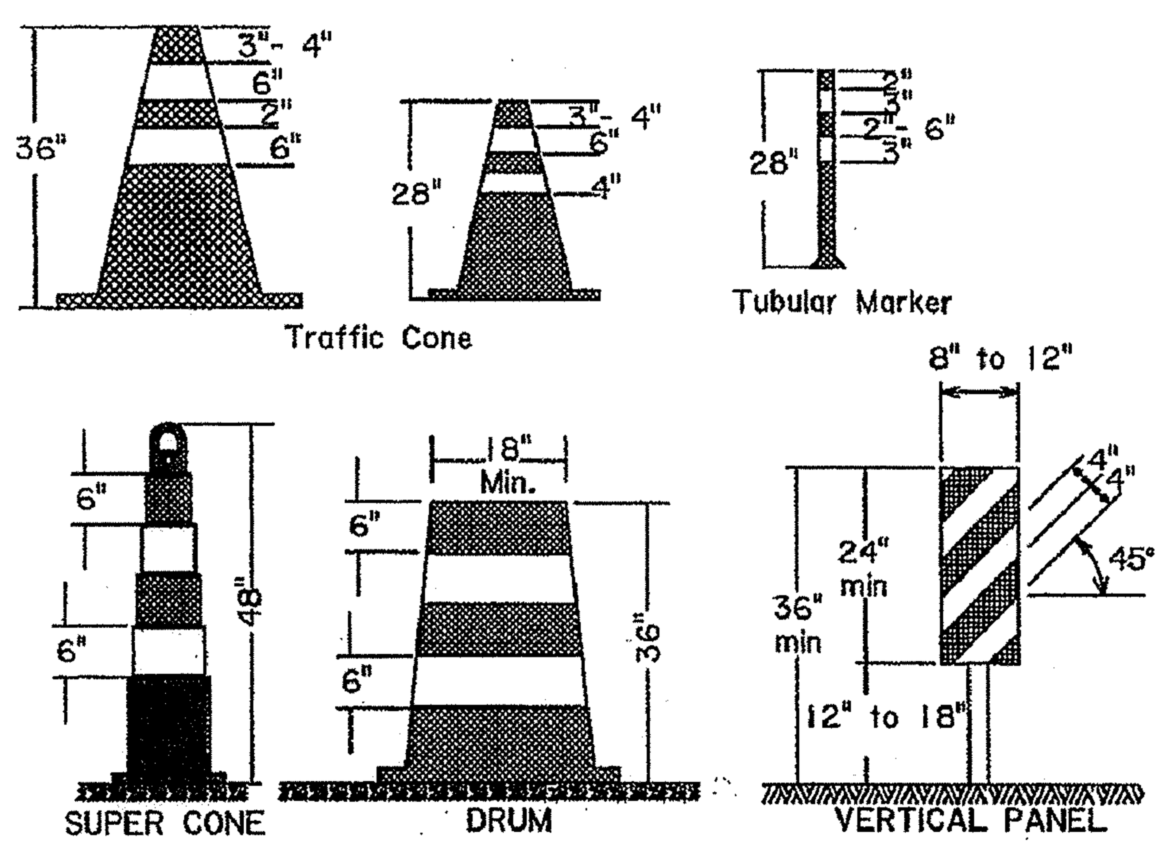

PORTABLE CHANGEABLE MESSAGE SIGNS

- When working within the traveled way, including shoulders and auxiliary lanes, Changeable Message Signs (CMS) shall be used on all Interstate Highways and on all other roadways (where space is available) with an ADT greater than 20,000 and should be delineated with retroreflective TTC devices. CMS will be paid for by each.
- When used in advance of a lane closure or a lane shift, the CMS should be placed on the right hand side of the road a minimum distance of 2 miles in advance of the taper for Interstates and to be determined by the Engineer on other highways.
- If vehicles are queing beyond the 2 mile CMS, an additional CMS should be placed on the right hand side of the road approximately 5 miles in advance of the taper for interstates.
- CMS messages shall be approved by the District Traffic Operations Engineer (DTOE).
- When Portable Changeable Message signs are not being used, they should be removed; if not removed, they should be shielded by guardrail or barriers; or if the previous two options are not feasible, they should be delineated with retroreflective TTC devices.

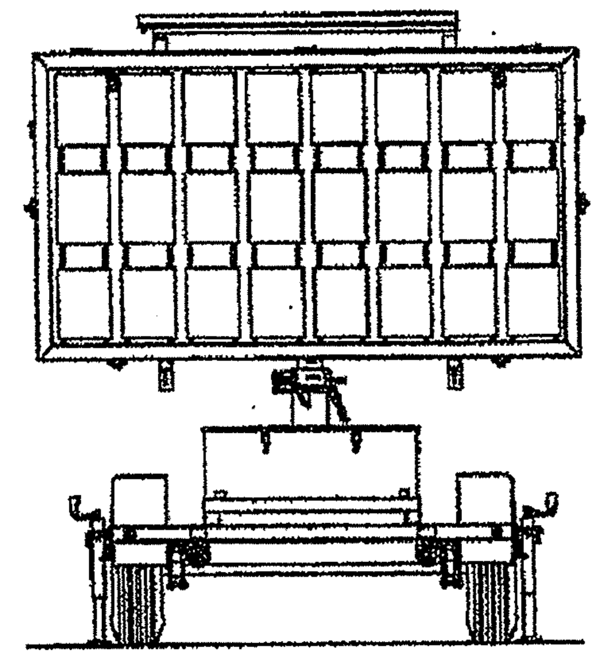

FLAGGERS

- All flaggers must be qualified. The contractor shall be responsible for training or assuring that all flaggers are qualified to perform flagging duties. A certificate indicating completion of a flagger training course shall be available to the engineer if requested. A Qualified Flagger is one that has attended courses such as those offered by the American Traffic Safety Services Association (ATSSA) or other courses approved by the Louisiana DOTD's Work Zone Task Force.
- When utilized, a flagger shall use a minimum 18 inch sign on a minimum 6' stop/slow paddle and wear ANSI Class 2 vest during day time operations and ANSI Class 3 ensemble during night operations. In all flagging operations, the flagger must be visible from flagger advance warning sign. Flaggers shall be properly trained.

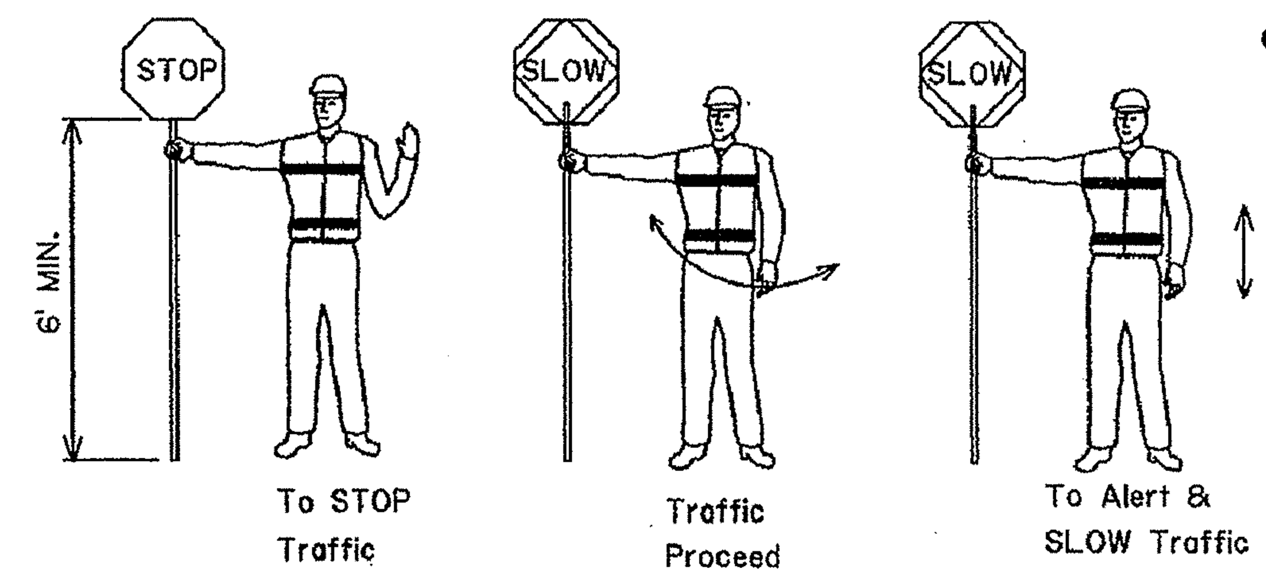

Use of Hand Sign

TYPE III BARRICADES

- All barricades shall use Type 3 High Intensity Sheeting on both sides of the barricade.
- All Type III Barricades shall be a minimum of 8 feet in length and must meet NCHRP 350 requirements.
- When signs and lights are to be mounted to a barricade, they must meet NCHRP 350 requirements.

MUTCD Website:
http://mutcd.fhwa.dot.gov/

FLASHING ARROW PANELS

- Flashing Arrow Panels shall be used for lane closures on all facilities with 2 or more lanes in a single direction and a speed limit greater than 35 mph.
- When used, flashing arrow panels should be located on the shoulder at the beginning of the taper.
- Where the shoulder width is limited, the flashing arrow panel should be placed within the closed lane as close to the beginning of the taper as practical.
- All Flashing Arrow Panels used on high speed roadways (45 mph and greater) shall be 4' x 8' Type C.
- When Flashing Arrow Panels signs are not being used, they should be removed; if not removed, they should be shielded by guardrail or barriers; or if the previous two options are not feasible, they should be delineated with retroreflective TTC devices.

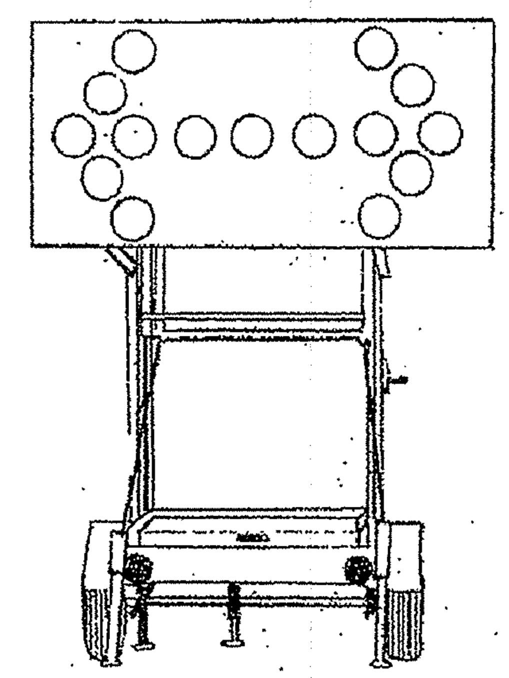

LIGHTING (see QPL)

- When used for overnight closures, lighting shall supplement all barricades that are placed in a closed lane or that extend across a highway. Two Type B High Intensity lights shall be used per lane closed in rural areas. In urban areas two Type A Low Intensity Lights may be used where adequate ambient lighting is available.
- One Type B High Intensity light shall be used to supplement the first sign (or pair of signs) that gives warning about a lane closure during night time operations.
- Type C steady burn lights shall be used on all channelizing devices in the taper as well as the first two devices in the tangent, for night use.

ALLOWABLE LAP SPLICE FOR U-CHANNEL POST

- U-Channel posts may be spliced where long lengths are required. The upper section shall overlap the lower section by at least 24 inches. The bottom edge of the upper section of the splice shall be a minimum of 24 inches above the ground. The spliced sections shall be secured with at least four 5/16 inch diameter hex bolts spaced equally along the splice.

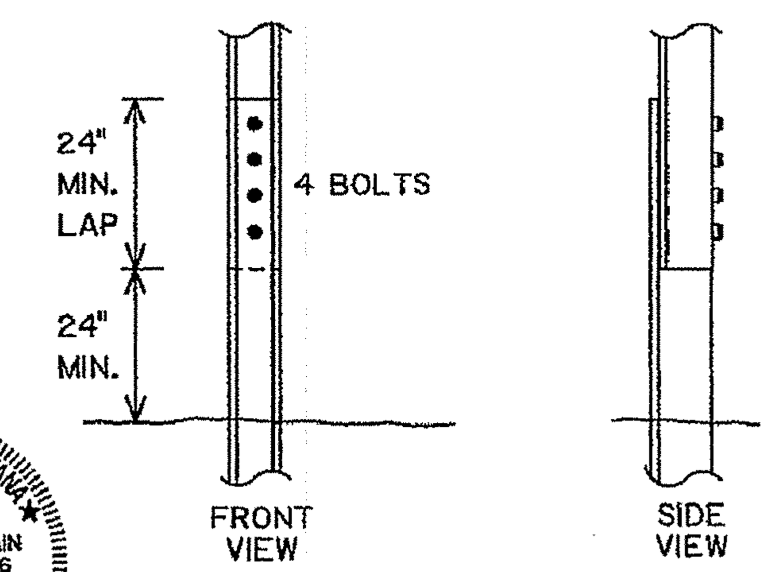

STATE OF LOUISIANA
PETER A. ALLAIN
REG. No. 20966
REGISTERED PROFESSIONAL ENGINEER IN CIVIL ENGINEERING
11/2/06

SHEET NUMBER 10

PARISH: ST. JOHN THE BAPTIST

CITY PARISH PROJECT | FEDERAL PROJECT | STATE PROJECT

DESIGNED C. ADAMS
CHECKED P. ALLAIN
DETAILED D. SOWARDS
CHECKED J. COLVIN
DATE 10/16/06
SHEET 1 OF 1

NO. | DATE | REVISION DESCRIPTION | BY

TEMPORARY TRAFFIC CONTROL GENERAL NOTES SHEET

SPECIAL DETAIL: TC-00

DOTD

TRAFFIC ENGINEERING

C:\Documents and Settings\d24b6\STANDARD PLANS\TC-00.dgn

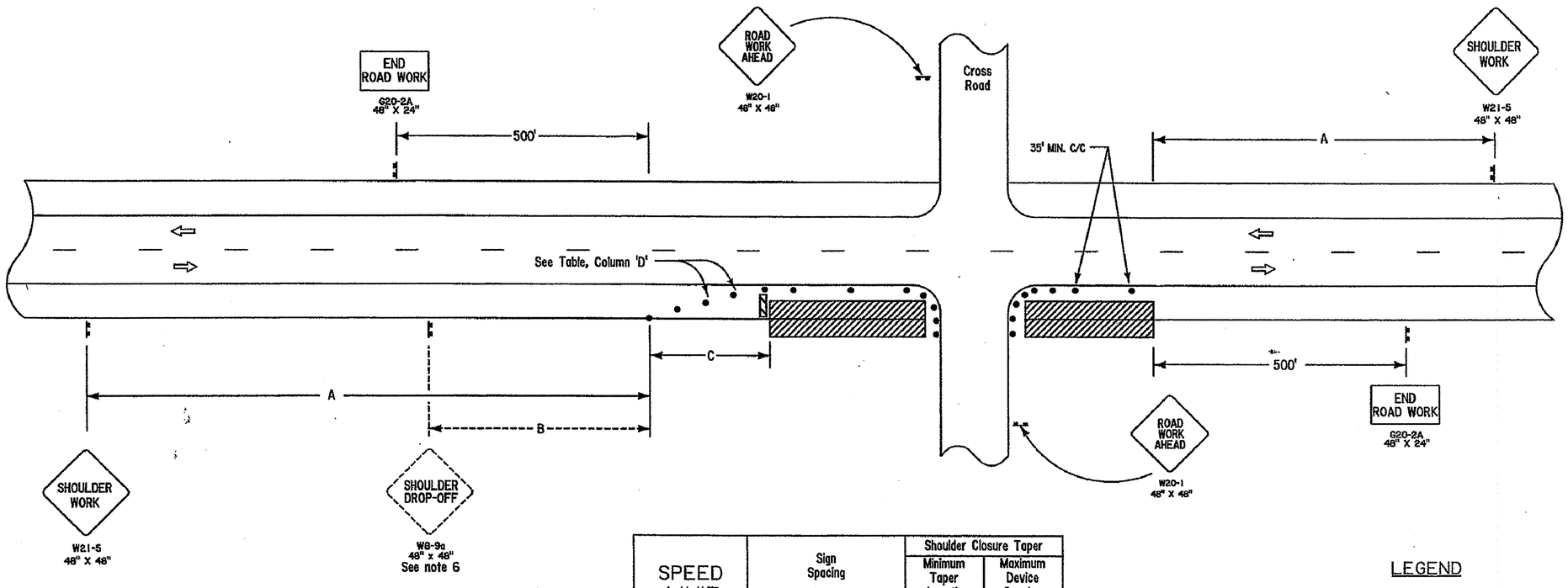

SPEED LIMIT	Sign Spacing		Shoulder Closure Taper	
			Minimum Taper Length	Maximum Device Spacing
	'A'	'B'	'C'	'D'
35 mph	500'	250'	100'	25'
45 mph	1000'	350'	200'	45'
≥55 mph	1500'	500'	250'	50'

If horizontal curve radius is less than 300', devices spacing shall be 25'.

LEGEND

- Traffic Sign
- Channelizing Devices
- Work Area
- Type III Barricades

NOTES

THIS SHEET SHALL BE USED WITH THE "TEMPORARY TRAFFIC CONTROL GENERAL NOTES SHEET (TC-00)".

1. THIS LAYOUT REPRESENTS TRAFFIC CONTROLS REQUIRED FOR WORKERS AND EQUIPMENT OPERATING WITHIN THE CLEAR ZONE FOR MORE THAN 1 HOUR. LESS THAN 1 HOUR, SEE FIG. TA-4 OF THE MUTCD. PORTABLE SIGNS MAY BE USED FOR WORK LASTING LESS THAN 3 DAYS.

2. NO SIGNS OR BARRICADES ARE REQUIRED FOR EQUIPMENT OPERATING OR WORK IN PROGRESS OUTSIDE THE CLEAR ZONE.

3. SIGNS AND BARRICADES SHALL BE COVERED OR REMOVED DURING NONWORKING HOURS UNLESS A DROP-OFF OR PHYSICAL OBSTRUCTION REMAINS WITHIN THE CLEAR ZONE.

4. TRAFFIC CONES MAY BE USED AS CHANNELIZING DEVICES ALONG THE WORK AREA DURING DAYLIGHT HOURS ONLY.

5. WORK OR EQUIPMENT CONFINED TO A SPOT LOCATION (LESS THAN 200 FEET) SHALL BE MARKED BY CHANNELIZING DEVICES SPACED AT 25 FEET OR BY A VEHICLE WITH A YELLOW REVOLVING LIGHT OR YELLOW STROBE LIGHT VISIBLE TO ONCOMING TRAFFIC. WORK EXTENDING MORE THAN 200 FEET OF ROADWAY LENGTH SHALL BE MARKED WITH APPROPRIATE DEVICES SPACED AS NOTED IN THE TABLE.

6. SHOULDER DROP-OFFS

   A. WHEN A SHOULDER DROP-OFF GREATER THAN 2" BUT LESS THAN 6" EXISTS, A "SHOULDER DROP-OFF" SIGN WILL FOLLOW THE "SHOULDER WORK" SIGN. WHEN THE DROP-OFF EXCEEDS 6", THE "SHOULDER DROP-OFF" SIGN SHALL BE REPLACED BY A "NO SHOULDER" SIGN.

   B. IF THE SPEED LIMIT IS GREATER THAN 45 MPH AND THE DROPOFF IS 10" OR GREATER WITHIN 2' OF THE TRAVEL LANE DURING NONWORKING HOURS, A PORTABLE BARRIER SHALL BE USED.

7. SPEED LIMIT IN THE ABOVE TABLE REFERS TO THE LEGALLY ESTABLISHED SPEED LIMIT BEFORE CONSTRUCTION. IF WORKERS ARE PRESENT WITHIN 2' OF TRAVEL LANE, SPEED LIMIT MAY NEED TO BE REDUCED.

8. WHEN A WORK AREA HAS BEEN ESTABLISHED ON ONE SIDE OF THE ROADWAY ONLY, THERE SHALL BE NO CONFLICTING OPERATIONS OR PARKING ON THE OPPOSITE SHOULDER WITHIN 500 FEET OF THE WORK AREA.

9. A TEMPORARY EDGELINE OR CHANNELIZING DEVICE SHALL BE PLACED AT THE PAVEMENT EDGE ADJACENT TO THE DROP-OFF DURING NONWORKING HOURS WHEN THE DROPOFF IS GREATER THAN 2".

10. ANY SIGNS IN CONFLICT WITH CONSTRUCTION SIGNING SHALL BE REMOVED OR COVERED.

11. MINIMUM CONSTRUCTION SIGNING: ANY ADDITIONAL SIGNS SHOWN IN THE "MANUAL ON UNIFORM TRAFFIC CONTROL DEVICES" AND REQUIRED BY THE PROJECT ENGINEER SHALL BE INSTALLED UNDER ITEM 713-01.

12. TYPE III BARRICADES SHALL BE PLACED IN THE CLOSED LANE AT A 1000' INTERVAL WHERE NO ACTIVE WORK IS ON GOING AND THE LANE MUST REMAIN CLOSED. TYPE III BARRICADES ARE ALSO REQUIRED BEFORE EACH OR GROUP OF UNFILLED HOLES OR HOLES FILLED WITH TEMPORARY MATERIAL, OR WHERE UNCURED CONCRETE EXISTS.

STATE OF LOUISIANA
PETER A. ALLAIN
REG. No. 20966
REGISTERED PROFESSIONAL ENGINEER IN CIVIL ENGINEERING
11/2/06

TRAFFIC CONTROL LAYOUT FOR WORK LESS THAN 15' FROM THE TRAVELED LANE

SPECIAL DETAIL: TC-01

TRAFFIC ENGINEERING

PARISH: ST. JOHN THE BAPTIST

SHEET NUMBER: 11

CITY PROJECT | FEDERAL PROJECT | STATE PROJECT

DESIGNED: C. ADAMS
CHECKED: P. ALLAIN
DETAILED: D. SOWARDS
CHECKED: J. COLTIN
DATE: 10/16/06
SHEET | BY

NO. | DATE | REVISION DESCRIPTION

23-APR-2007 16:23

C:\Documents and Settings\d24b8\STANDARD PLANS\TC-01.dgn

23-APR-2007 16:58

* REMOVE OR COVER WHEN NO LONGER APPLICABLE.
** REPLACE WITH "ROAD WORK 1/2 MILE" WHEN NO LONGER APPLICABLE.

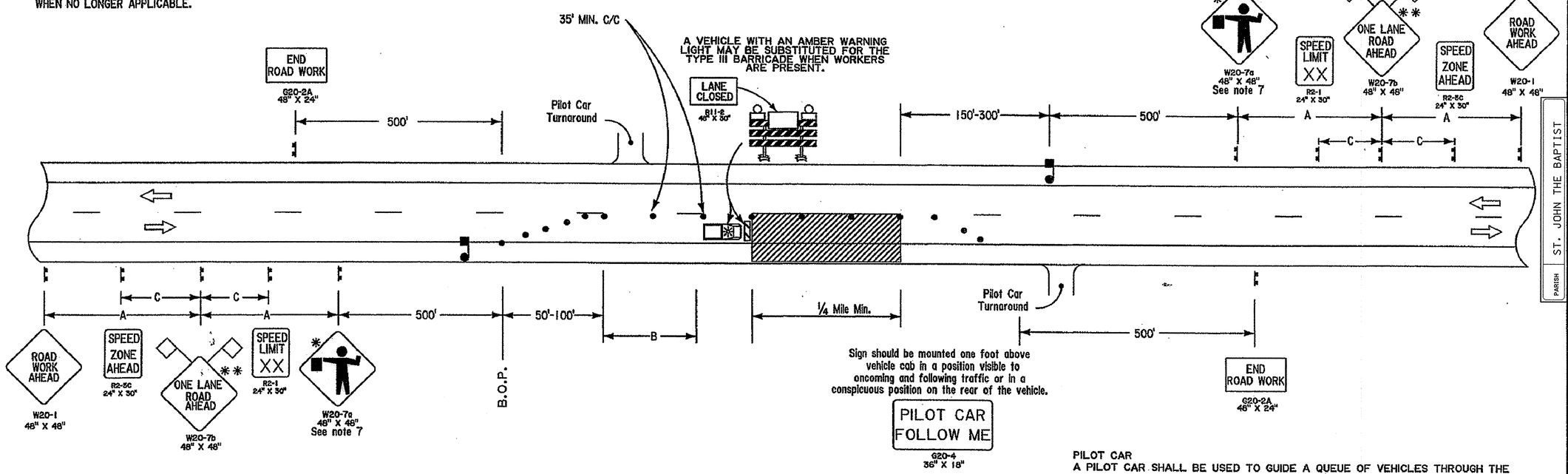

NOTES

THIS SHEET SHALL BE USED WITH THE "TEMPORARY TRAFFIC CONTROL GENERAL NOTES SHEET (TC-00)".

1. WHEN A WORK AREA HAS BEEN ESTABLISHED ON ONE SIDE OF THE ROADWAY ONLY, THERE SHALL BE NO PARKING ON THE OPPOSITE SHOULDER WITHIN 500 FEET OF THE WORK AREA.

2. CHANNELIZING DEVICES MAY BE PLACED UP TO 2' BEYOND CENTERLINE ONLY AT SPECIFIC LOCATIONS WHERE ACTUAL WORK ACTIVITY IS TAKING PLACE. A 10' MINIMUM TRAVELED LANE SHOULD BE MAINTAINED WHERE PRACTICAL. CHANNELIZING DEVICES SHALL BE RETURNED TO THE CENTERLINE WHEN THE WORK ACTIVITY HAS PASSED.

3. SPACING OF CHANNELIZING DEVICES IN THE TAPER SHOULD BE NO MORE THAN 20'. A MINIMUM OF 5 CHANNELIZING DEVICES ARE TO BE USED IN THE TAPER.

4. SPEED LIMIT REFERS TO THE LEGALLY ESTABLISHED SPEED LIMIT BEFORE CONSTRUCTION.

5. TO PREVENT VEHICLES FROM ENTERING THE WORK AREA AGAINST THE FLOW OF TRAFFIC, AN ADDITIONAL FLAGGER SHALL BE STATIONED AT EACH INTERSECTION, MAJOR DRIVEWAY, RAILROAD CROSSING OR CROSSING WITHIN THE WORK AREA.

6. WITH THE APPROVAL OF THE ENGINEER, THE LENGTH OF THE WORK AREA MAY, FOR A SHORT DURATION, BE CHANGED TO AS MUCH AS ONE-HALF MILE MAXIMUM TO IMPROVE THE SIGHT DISTANCE TO THE FLAGGER. VISUAL OR RADIO CONTACT SHALL BE REQUIRED BETWEEN THE FLAGGERS AT ALL TIMES.

7. FOR PROJECTS IN RURAL AREAS THE DISTANCE BETWEEN FLAGGERS SHALL NOT EXCEED 2.5 MILES FOR A.D.T. (AVERAGE DAILY TRAFFIC) OF LESS THAN 2,500 AND 2.0 MILES FOR A.D.T. FROM 2,500 TO 5,000. DISTANCE BETWEEN FLAGGERS SHALL NOT EXCEED 1.5 MILES FOR A.D.T. GREATER THAN 5,000 VEHICLES.

8. THE CONTRACTOR MAY EXTEND THE LANE CLOSURE AN ADDITIONAL 1.0 MILE UNDER THE FOLLOWING PROVISIONS:

   (A) THE LANE CLOSURE EXTENSION IS PERMITTED ONLY DURING NON-PEAK HOURS.

   (B) ONCE THE TRAFFIC CONTROL DEVICES HAVE BEEN PLACED TO EXTEND THE LANE CLOSURE, THE TRAFFIC CONTROL DEVICES AT THE BEGINNING OF THE TRAFFIC CONTROL SHALL BE MOVED DOWNSTREAM TO LIMIT THE WORK AREA TO THE DISTANCE DEFINED IN NOTE 7.

9. ANY SIGNS IN CONFLICT WITH CONSTRUCTION SIGNING SHALL BE REMOVED OR COVERED.

10. MINIMUM CONSTRUCTION SIGNING: ANY ADDITIONAL SIGNS SHOWN IN THE "MANUAL ON UNIFORM TRAFFIC CONTROL DEVICES" AND REQUIRED BY THE PROJECT ENGINEER SHALL BE INSTALLED UNDER ITEM 713-01.

11. VISUAL OR RADIO CONTACT SHALL BE REQUIRED BETWEEN FLAGGERS AT ALL TIMES. THE FLAGGER SHALL BE VISIBLE FROM FLAGGER SIGN.

12. TYPE III BARRICADES SHALL BE PLACED IN THE CLOSED LANE AT A 1000' INTERVAL WHERE NO ACTIVE WORK IS ON GOING AND THE LANE MUST REMAIN CLOSED. TYPE III BARRICADES ARE ALSO REQUIRED BEFORE EACH OR GROUP OF UNFILLED HOLES OR HOLES FILLED WITH TEMPORARY MATERIAL, OR WHERE UNCURED CONCRETE EXISTS.

13. IF THE CONTRACTOR IS REQUIRED TO USE A PILOT CAR, HE IS NOT REQUIRED TO HAVE CHANNELIZING DEVICES IN THE TANGENT SECTION. IF NOT REQUIRED, THE CONTRACTOR CAN USE EITHER A PILOT CAR OR CHANNELIZING DEVICES.

SPEED LIMIT (See note 4)	Approximate Sign Spacing		
	"A"	"B"	"C"
35 mph	500'	100'-200'	N/A
45 mph	1000'	100'-200'	500'
55 mph	1500'	200'-300'	800'

PILOT CAR

A PILOT CAR SHALL BE USED TO GUIDE A QUEUE OF VEHICLES THROUGH THE TEMPORARY TRAFFIC CONTROL ZONE OR DETOUR. IT SHALL BE USED IN RESTRICTED VISIBILITY OPERATIONS SUCH AS LIME OR CEMENT STABILIZATION, CHIP SEALS, OR OPERATIONS IN HILLY OR CURVY TERRAINS WHERE FLAGGERS CAN'T SEE EACH OTHER (REQUIRE A CLEAR LINE-OF-SIGHT). PILOT CARS ARE NOT REQUIRED IN CONFINED OPERATIONS SUCH AS STRIPING OR OTHER LIMITED LANE CLOSURE OPERATIONS LESS THAN 250' (i.e. CROSS DRAIN INSTALLATIONS UNLESS THERE ARE MULTIPLE CROSS DRAINS WITH A CONTINUOUS LANE CLOSURE). THE OPERATION OF THE PILOT VEHICLE SHALL BE COORDINATED WITH FLAGGING OPERATIONS OR OTHER CONTROLS AT EACH END OF THE ONE-LANE SECTION.

FLAGGERS

WHEN UTILIZED, A FLAGGER SHALL USE A MINIMUM 18 INCH SIGN ON A MINIMUM 6' STOP/SLOW PADDLE AND WEAR ANSI CLASS 2 VEST DURING DAY OPERATIONS AND ANSI CLASS 3 ENSEMBLE DURING NIGHT OPERATIONS. IN ALL FLAGGING OPERATIONS, THE FLAGGER MUST BE VISIBLE FROM FLAGGER ADVANCE WARNING SIGN. FLAGGERS SHALL BE PROPERLY TRAINED.

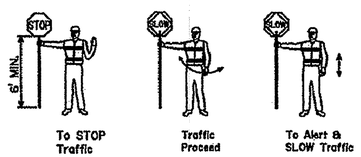

Use of Hand Sign

LEGEND

- Traffic Sign
- Flagger
- Channelizing Devices
- Type III Barricades
- Work Area
- Type B Light

STATE OF LOUISIANA
PETER A. ALLAIN
REG. No. 20966
REGISTERED PROFESSIONAL ENGINEER IN CIVIL ENGINEERING
11/2/06

C:\Documents and Settings\d24b8\STANDARD PLANS\TC-03.dgn

SHEET NUMBER	12
CITY/PARISH PROJECT	
FEDERAL PROJECT	
STATE PROJECT	
PARISH	ST. JOHN THE BAPTIST
DESIGNED / CHECKED	C. ADAMS / P. ALLAIN
DETAILED / CHECKED	D. SOWARDS / J. COLVIN
DATE / SHEET	10/16/06

NO. | DATE | REVISION DESCRIPTION | BY

TRAFFIC CONTROL FOR LANE CLOSURE GREATER THAN 1/4 MILE IN LENGTH (SUITABLE FOR MOVING OPERATIONS)

SPECIAL DETAIL TC-03

TRAFFIC ENGINEERING

24-APR-2007 10:46

SPEED LIMIT	Approximate Sign Spacing 'A'
35 mph	500'
≥ 45 mph	1000'

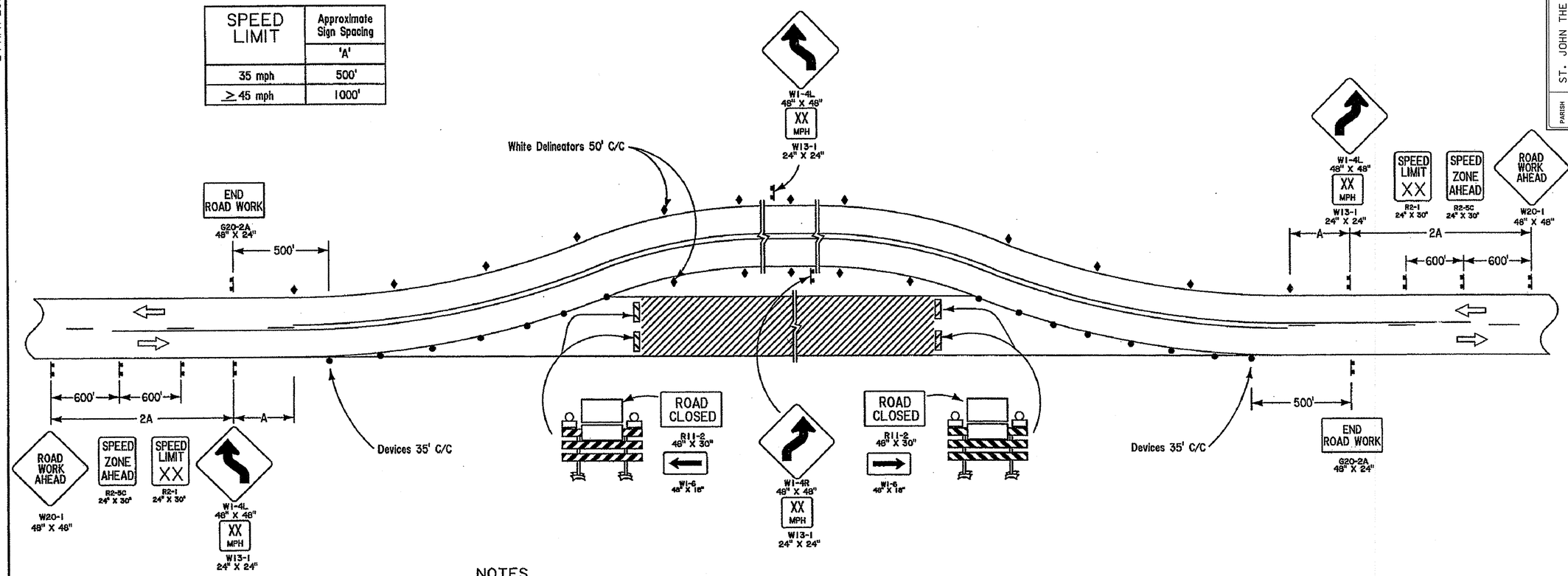

NOTES

THIS SHEET SHALL BE USED WITH THE "TEMPORARY TRAFFIC CONTROL GENERAL NOTES SHEET (TC-00)".

1. SPEED LIMIT REFERS TO THE LEGALLY ESTABLISHED SPEED LIMIT BEFORE CONSTRUCTION AND NOT THE ADVISORY SPEED DURING CONSTRUCTION.
2. THE TRAFFIC ENGINEER MAY REDUCE THE ADVISORY SPEED IF DEEMED APPROPRIATE. IF REDUCED BELOW 35 MPH, THE REVERSE CURVE SIGNS (W1-4L OR W1-4R) WILL BE CHANGED TO REVERSE TURN SIGN (W1-3LA OR W1-3RA).
3. ADVISORY SPEED TO BE DETERMINED IN THE FIELD BY THE DISTRICT TRAFFIC OPERATIONS ENGINEER.
4. ALL CONFLICTING PAVEMENT MARKINGS SHALL BE REMOVED. (NO DIRECT PAY)
5. THE TEMPORARY DIVERSON STRUCTURE SHALL MEET ALL NCHRP 350 STANDARDS FOR APPROACH END TREATMENTS.
6. ANY SIGNS IN CONFLICT WITH CONSTRUCTION SIGNING SHALL BE REMOVED OR COVERED.
7. MINIMUM CONSTRUCTION SIGNING: ANY ADDITIONAL SIGNS SHOWN IN THE "MANUAL ON UNIFORM TRAFFIC CONTROL DEVICES" AND REQUIRED BY THE PROJECT ENGINEER SHALL BE INSTALLED UNDER ITEM 713-01.
8. IF THE RIGHT OF WAY PROHIBITS THE DIVERSION FROM BEING CONSTRUCTED FOR THE LEGALLY ESTABLISHED SPEED LIMIT, THE DISTRICT TRAFFIC OPERATIONS ENGINEER MAY REDUCE THE SPEED LIMIT BY INTERVALS OF 10 mph.
9. THE DIVERSON SHALL BE STRIPED WITH DOUBLE YELLOW SOLID LINES AND RAISED PAVEMENT MARKINGS AS PER PM-01.

LEGEND

- Traffic Sign
- Channelizing Devices
- Type III Barricades
- Single White Delineators
- Type B Light

STATE OF LOUISIANA
PETER A. ALLAIN
REG. No. 20966
REGISTERED PROFESSIONAL ENGINEER IN CIVIL ENGINEERING
11/2/06

PARISH: ST. JOHN THE BAPTIST

SHEET NUMBER: 13

CITY PROJECT | FEDERAL PROJECT | STATE PROJECT

DESIGNED C. ADAMS
CHECKED P. ALLAIN
DETAILED D. SOWARDS
CHECKED J. COLVIN
DATE 10/16/06
SHEET

NO. | DATE | REVISION DESCRIPTION | BY

TRAFFIC CONTROL LAYOUT FOR PAVED ON SITE DIVERSION WITH TWO-WAY TRAFFIC

SPECIAL DETAIL TC-04

TRAFFIC ENGINEERING

C:\Documents and Settings\d2468\STANDARD PLANS\TC-04.dgn

24-APR-2007 10:46

C:\Documents and Settings\d24b8\STANDARD PLANS\TC-06.dgn

*** SPEED LIMIT IS TO BE 10 MPH LESS THAN LEGALLY POSTED SPEED LIMIT.
** SPEED LIMIT IS TO BE RETURNED TO LEGALLY POSTED SPEED LIMIT.
*** SPEED LIMIT > 45 MPH USE "ROAD WORK 1 MILE"
SPEED LIMIT ≤ 45 MPH USE "ROAD WORK AHEAD"

LANE CLOSURE AT BEGINNING OF PROJECT

A VEHICLE WITH A FLASHING AMBER LIGHT AND A TRUCK MOUNTED ATTENUATOR SHALL BE USED IN ADVANCE OF AREAS WHERE WORKERS ARE PRESENT WITHOUT POSITIVE BARRIER PROTECTION.

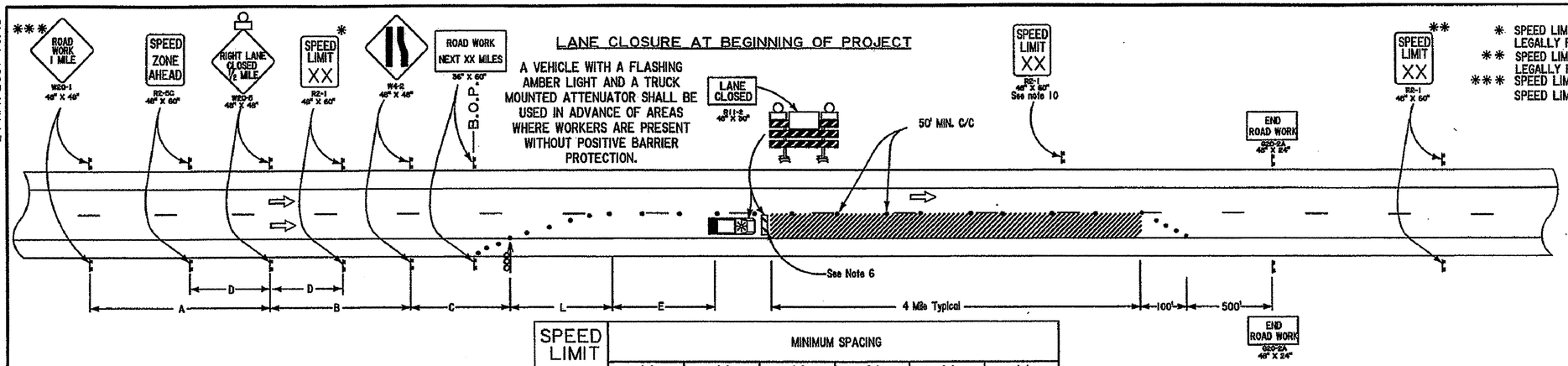

SPEED LIMIT	MINIMUM SPACING					
	'A'	'B'	'C'	'D'	'E'	'L'
45 mph	1140'	1000'	500'	500'	220'	540'
55 mph	2640'	1640'	1000'	800'	335'	660'
60 mph	2640'	1640'	1000'	800'	415'	720'
65 mph	2640'	1640'	1000'	800'	485'	780'
70 mph	2640'	1640'	1000'	800'	555'	840'

LANE CLOSURE WITHIN LIMITS OF PROJECT

A VEHICLE WITH A FLASHING AMBER LIGHT AND A TRUCK MOUNTED ATTENUATOR SHALL BE USED IN ADVANCE OF AREAS WHERE WORKERS ARE PRESENT WITHOUT POSITIVE BARRIER PROTECTION.

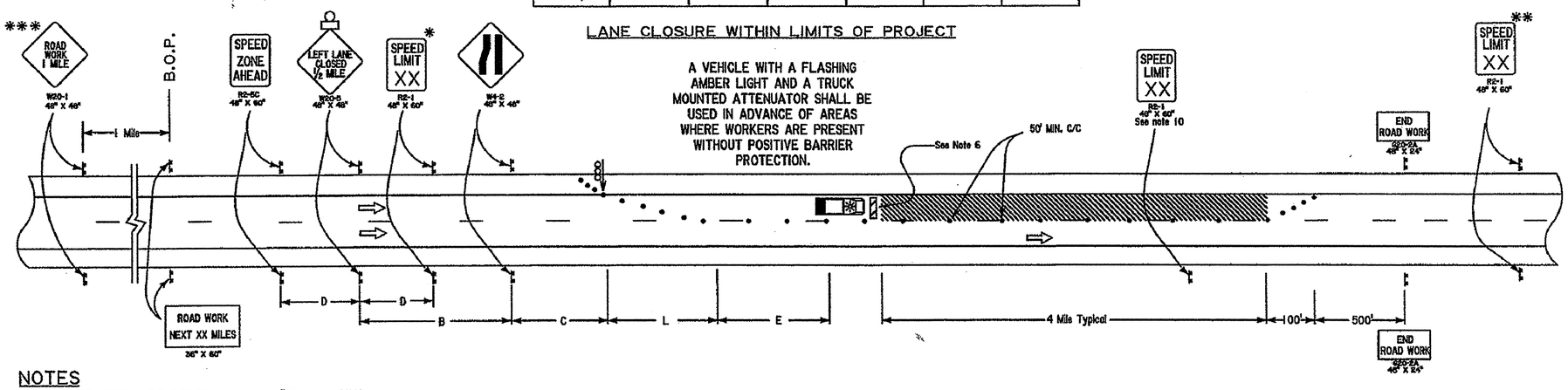

LEGEND

- Traffic Sign
- Channelizing Devices
- Type III Barricades
- Flashing Arrow Panel
- Work Area
- Type B Light

NOTES

THIS SHEET SHALL BE USED WITH THE "TEMPORARY TRAFFIC CONTROL GENERAL NOTES SHEET (TC-00)".

1. SPEED LIMIT REFERS TO THE LEGALLY ESTABLISHED SPEED LIMIT BEFORE CONSTRUCTION.
2. WHEN DOING ANY INTERSTATE WORK, A MINIMUM OF TWO DYNAMIC MESSAGE SIGNS PER DIRECTION SHALL BE PLACED IN ADVANCE OF THE LANE CLOSURE. GUIDANCE AS TO PLACEMENT IS SHOWN ON TC-00; HOWEVER, SPECIFIC DISTANCES TO BE SET BY THE PROJECT ENGINEER.
3. DOWNSTREAM TAPERS SHALL BE 100' PER LANE WITH CHANNELIZING DEVICES SPACED AT A SPACING OF 20'.
4. TYPE III BARRICADES SHALL BE PLACED IN THE CLOSED LANE AT A 1000' INTERVAL WHERE NO ACTIVE WORK IS ON GOING AND THE LANE MUST REMAIN CLOSED. TYPE III BARRICADES ARE ALSO REQUIRED BEFORE EACH OR GROUP OF UNFILLED HOLES OR HOLES FILLED WITH TEMPORARY MATERIAL, OR WHERE UNCURED CONCRETE EXISTS.
5. IF A RAMP ENTRANCE OR EXIT TAPER FALLS WITHIN THE WORK AREA, REFER TO STANDARD ROAD PLANS TC-08 AND TC-09 FOR TRAFFIC CONTROL DETAILS.
6. A VEHICLE WITH A FLASHING AMBER LIGHT AND A TRUCK MOUNTED ATTENUATOR SHALL BE USED IN ADVANCE OF AREAS WHERE WORKERS ARE PRESENT WITHOUT POSITIVE BARRIER PROTECTION.
7. CHANNELIZING DEVICES MAY ENCROACH UP TO 2 FEET FROM CENTERLINE INTO THE OPEN LANE ONLY AT SPECIFIC LOCATIONS WHERE ACTUAL WORK ACTIVITY IS TAKING PLACE. CHANNELIZING DEVICES SHALL BE RETURNED TO TO THE CLOSED LANE WHEN THE WORK ACTIVITY HAS PASSED. IN NO CASE SHALL THE MAINLINE WIDTH OF THE TRAVEL LANE BE LESS THAN 10'.
8. A FLAGGER SHALL BE USED TO ALERT MOTORISTS WHEN EQUIPMENT OR WORKERS ENCROACH WITHIN 2 FEET OF AN OPEN LANE. THE FLAGGER SHALL BE POSTED ADJACENT TO THE OPEN TRAVEL LANE AND IMMEDIATELY UPSTREAM OF EACH OPERATION. ENCROACHMENT SHALL BE HELD TO A MINIMUM.
9. WHEN THE LENGTH OF CLOSURE IS GREATER THAN 1 MILE, INSTALL SPEED LIMIT SIGNS AT 1 MILE INTERVALS.
10. IF CONDITIONS RESULT IN A DROPOFF OR RISE, BETWEEN LANE CLOSURE AND TRAVEL LANE, WHICH EXCEEDS 2 INCHES OVERNIGHT, THE CONTRACTOR SHALL PLACE A TEMPORARY EDGE LINE IN THE OPEN LANE, A MINIMUM OF 1 FOOT FROM THE DROPOFF OR RISE. IF THE CONTRACTOR CHOOSES TO USE DRUMS FOR THE CHANNELIZING DEVICES, THE TEMPORARY EDGE LINE MAY BE OMITTED AS LONG AS THE DEVICE SPACING IS 50' OR LESS. IN EITHER CASE, THE CHANNELIZING DEVICES SHALL BE PLACED IN THE CLOSED LANE DURING NONWORKING HOURS.
11. HIGH INTENSITY FLASHING LIGHTS SHALL BE USED TO MARK THE SECOND ADVANCE WARNING SIGN (_____LANE CLOSED ½ MILE). LOW INTENSITY FLASHING LIGHTS SHALL BE USED TO MARK ALL OTHER HAZARDS OFF THE TRAVEL WAY. STEADY BURNING LIGHTS SHALL BE USED ON ALL TRAFFIC CONTROL DEVICES USED FOR MERGING TAPER, INCLUDING THE FIRST TWO DEVICES AFTER THE TAPER ENDS. FIRST LIGHT IN A MERGING TAPER SHALL BE FLASHING.
12. THE MAXIMUM SPACING BETWEEN CHANNELIZING DEVICES IN A MERGING TAPER AND SHIFTING TAPER SHALL NOT BE GREATER THAN 50'.
13. ANY SIGNS IN CONFLICT WITH CONSTRUCTION SIGNING SHALL BE REMOVED OR COVERED.
14. MINIMUM CONSTRUCTION SIGNING: ANY ADDITIONAL SIGNS SHOWN IN THE "MANUAL ON UNIFORM TRAFFIC CONTROL DEVICES" AND REQUIRED BY THE PROJECT ENGINEER SHALL BE INSTALLED UNDER ITEM 713-01.

STATE OF LOUISIANA
PETER A. ALLAIN
REG. No. 20966
REGISTERED PROFESSIONAL ENGINEER IN CIVIL ENGINEERING
11/2/06

SHEET NUMBER	14
PARISH	ST. JOHN THE BAPTIST
CITY PARISH PROJECT	
FEDERAL PROJECT	
STATE PROJECT	
DESIGNED / CHECKED	C. ADAMS / P. ALLAIN
DETAILED / CHECKED	D. SOWARDS / J. COLVIN
DATE / SHEET	10/16/06

NO.	DATE	REVISION DESCRIPTION	BY

TRAFFIC CONTROL LAYOUT FOR LANE CLOSURES ON DIVIDED HIGHWAY

SPECIAL / SHEET TC-06

TRAFFIC ENGINEERING

For use when immediate work area is less than 250' from nearest crossroad travel lane, but work does not interfere with crossroad travellanes.

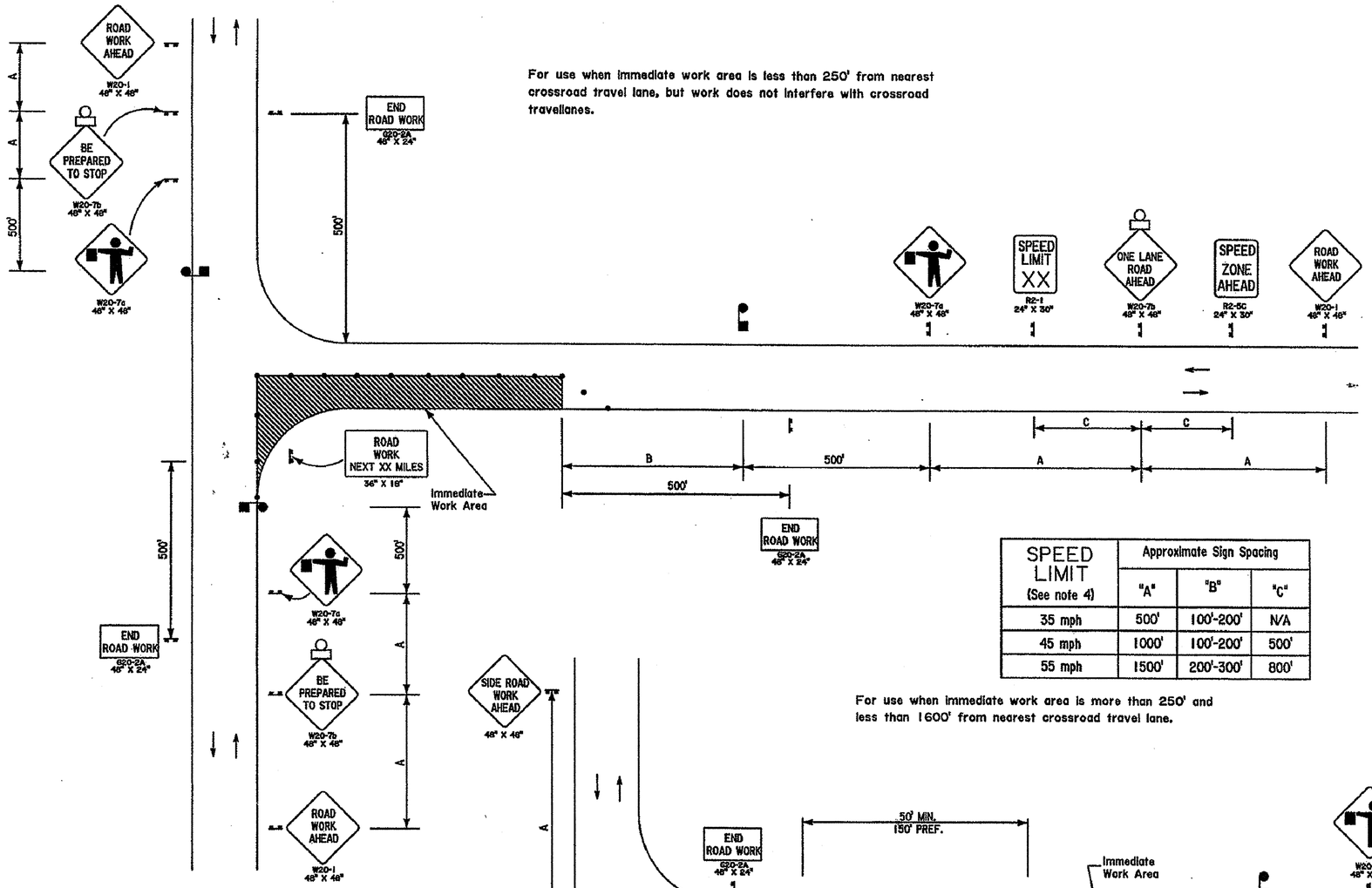

SPEED LIMIT (See note 4)	Approximate Sign Spacing		
	"A"	"B"	"C"
35 mph	500'	100'-200'	N/A
45 mph	1000'	100'-200'	500'
55 mph	1500'	200'-300'	800'

For use when immediate work area is more than 250' and less than 1600' from nearest crossroad travel lane.

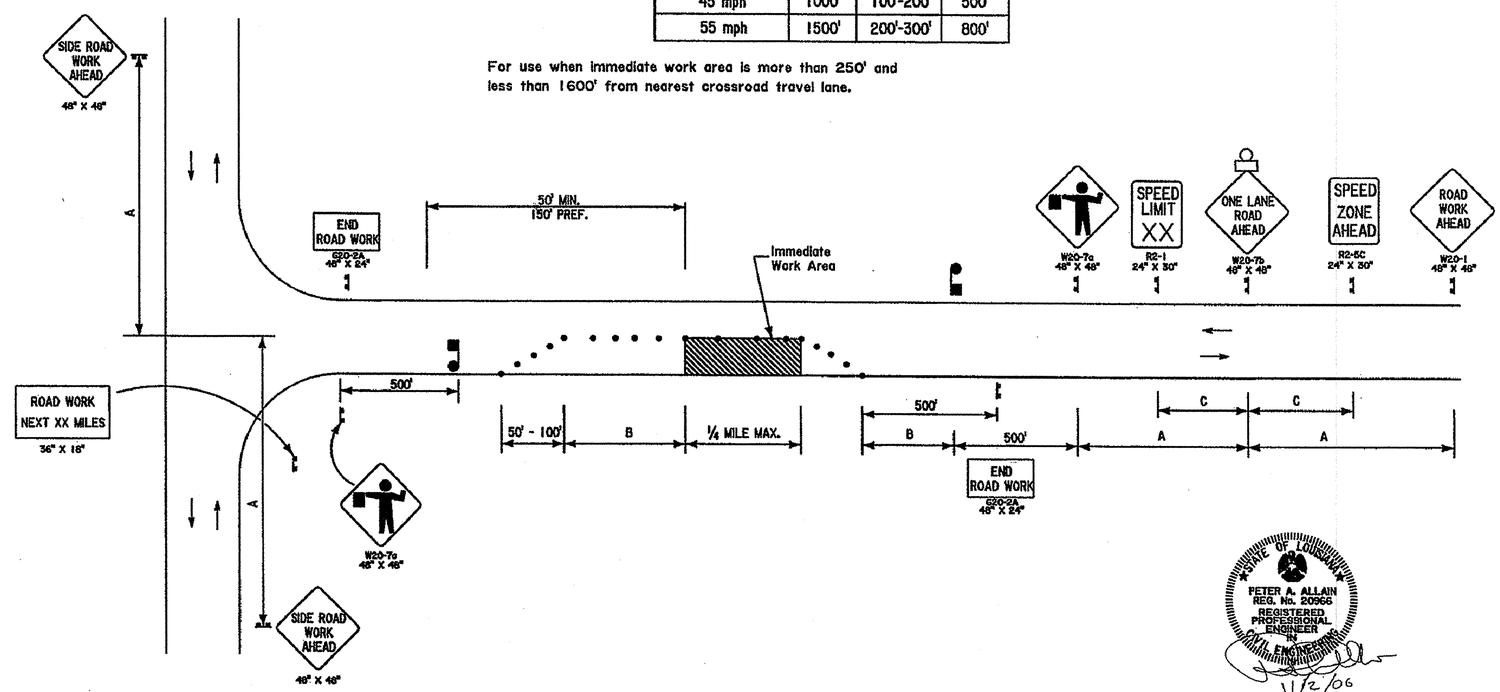

FLAGGERS

WHEN UTILIZED, A FLAGGER SHALL USE A MINIMUM 18 INCH SIGN ON A MINIMUM 6' STOP/SLOW PADDLE AND WEAR ANSI CLASS 2 VEST DURING DAY OPERATIONS AND ANSI CLASS 3 ENSEMBLE DURING NIGHT OPERATIONS. IN ALL FLAGGING OPERATIONS, THE FLAGGER MUST BE VISIBLE FROM FLAGGER ADVANCE WARNING SIGN. FLAGGERS SHALL BE PROPERLY TRAINED.

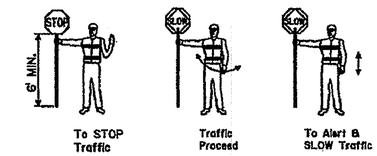

Use of Hand Sign

LEGEND

- Traffic Sign
- Channelizing Devices
- Type III Barricades
- Work Area
- Flagger
- Type B Light

NOTES

THIS SHEET SHALL BE USED WITH THE "TEMPORARY TRAFFIC CONTROL GENERAL NOTES SHEET (TC-00)".

1. IF REDUCED SPEED LIMIT IS REQUIRED, APPLICABLE SPEED LIMIT TO BE DETERMINED IN THE FIELD, TO BE AS HIGH AS PRACTICABLE AND NEVER LOWER THAN 20 MPH.
2. VISUAL OR RADIO CONTACT SHALL BE REQUIRED BETWEEN THE FLAGGERS AT ALL TIMES.
3. ANY SIGNS IN CONFLICT WITH CONSTRUCTION SIGNING SHALL BE REMOVED OR COVERED.
4. MINIMUM CONSTRUCTION SIGNING: ANY ADDITIONAL SIGNS SHOWN IN THE "MANUAL ON UNIFORM TRAFFIC CONTROL DEVICES" AND REQUIRED BY THE PROJECT ENGINEER SHALL BE INSTALLED UNDER ITEM 713-01.
5. ANY SIGN NOT APPLICABLE FOR NIGHT TIME USE SHALL BE EITHER REMOVED OR COVERED AT THE END OF EACH DAY.

STATE OF LOUISIANA
PETER A. ALLAIN
REG. No. 20966
REGISTERED PROFESSIONAL ENGINEER IN CIVIL ENGINEERING
11/2/06

TRAFFIC CONTROL LAYOUT FOR LANE CLOSURES ON TWO LANE UNDIVIDED HIGHWAYS DURING OVERLAYS AND MOVING OPERATIONS

SPECIAL DETAIL TC-15

TRAFFIC ENGINEERING

PARISH	CITY PARISH PROJECT	FEDERAL PROJECT	STATE PROJECT
ST. JOHN THE BAPTIST			

DESIGNED	C. ADAMS	DETAILED	D. SOWARDS	DATE	10/16/06
CHECKED	P. ALLAIN	CHECKED	J. COLVIN	SHEET	

SHEET NUMBER 15

NO.	DATE	REVISION DESCRIPTION	BY

24-APR-2007 10:58

C:\Documents and Settings\d248\STANDARD PLANS\TC-15.dgn