WASTEWATER LIFT STATION TELEMETRY SYSTEM

FOR ST. JOHN THE BAPTIST PARISH, LOUISIANA

BKI NO. NO.13.060

ST. JOHN THE BAPTIST PARISH

PARISH PRESIDENT
NATALIE ROBOTTOM

DIRECTOR OF UTILITIES
VIRGIL RAYNERI

INDEX OF DRAWINGS

TS1.0	TITLE SHEET
S1.0	STRUCTURAL NOTES
S2.0	STRUCTURAL DETAILS
E1.0	SYMBOL SCHEDULE, ABBREVIATIONS AND NOTES
E2.0	SCHEDULES AND DETAILS
E2.1	PROJECT SITE LOCATION MAP
E2.2	WATER WIRELESS CONTROL I/O SYSTEM
E2.3	TELEMETRY SYSTEM BLOCK DIAGRAM
E2.4	PUMP CONTROLLERS
E3.0	0–MCREINE TRAILER PARK, 1–BROOKS PRODUCTS, 2–RIVER FOREST – WINDSOR #1, 3–RIVER FOREST – LANCELOT #1
E4.0	4–ROUSSEL'S, 5–NED DUHE, 6–EAST 7TH ST, 7–SIDNEY VICKNAIR TRACT
E5.0	8–BELL SOUTH, 9–MAIN ST – ST MATHEW'S CHURCH, 10–JENNIFER LN & MAIN ST, 11–REMY SUBDIVISION
E6.0	12–WOODLAND #2, 13–INDIGO PARK, 14–WOODLAND #5, 15–CAMBRIDGE #1
E7.0	16–LOVER'S LANE, 17–CAMBRIDGE #3, 18–CAMBRIDGE #5, 19–CARROLLWOOD DR
E8.0	20–GREENWOOD #2, 21–HEMLOCK ST, 22–PARISH BUILDING, 23–CARMEL VALLEY
E9.0	24–COUNTRY CLUB #1, 25–PEBBLE BEACH, 26–BIG BELLE TERRE, 27–ELM ST
E10.0	28–LAPLACE PARK #1, 29–MINI STORAGE, 30–BELLE POINT SOUTH #1, 31–HOSPITAL
E11.0	32–EAST 10TH ST, 33–DUPONT, 34–ZA MONTZ, 35–CENTRAL AVE
E12.0	36–RIVERSIDE ACADEMY, 37–WEST 10TH ST, 38–ROSENWALD ST, 40–WEST 19TH
E13.0	41–TIMBERMILL, 42–SOUTH CHURCH & BLACKBERRY, 43–WEST 8TH ST, 44–JACK CT.
E14.0	45–HWY 18 NEAR PERCY CT, 46–WEST 1ST ST, 47–CENTRAL AVE, 48–GEORGE CT
E15.0	49–EAST 13TH ST, 39–NORTHWEST 12TH ST
E16.0	ELECTRICAL DETAILS

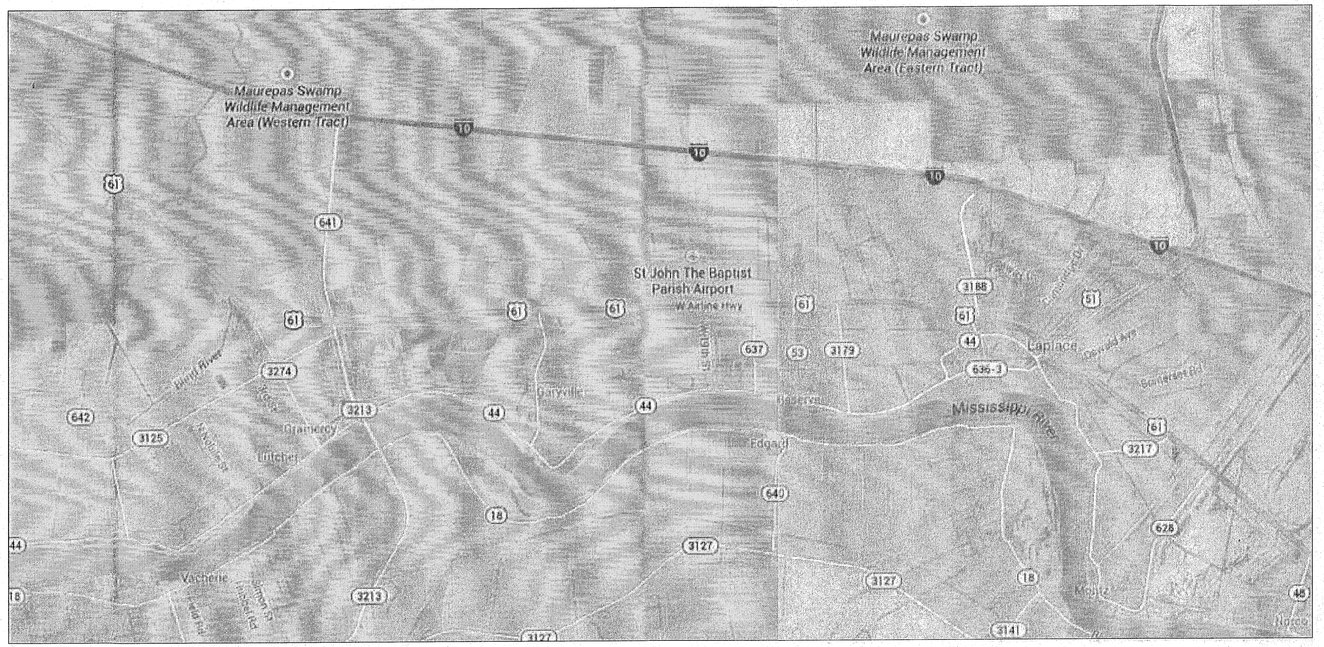

VICINITY MAP

N.T.S.

STATE OF LOUISIANA
MICHAEL G. JACKSON
REG. No. 15148
REGISTERED PROFESSIONAL ENGINEER IN CIVIL ENGINEERING

APPROVAL

Michael G. Jackson — Nov. 20, 2014
MICHAEL G. JACKSON, PE — DATE
EXECUTIVE VICE PRESIDENT
BURK–KLEINPETER, INC.

Natalie Robottom — 11/20/14
NATALIE ROBOTTOM — DATE
PARISH PRESIDENT
ST. JOHN THE BAPTIST PARISH, LOUISIANA

11/20/14
VIRGIL RAYNERI — DATE
DIRECTOR OF UTILITIES
ST. JOHN THE BAPTIST PARISH, LOUISIANA

BURK–KLEINPETER, INC. 4176 CANAL STREET NEW ORLEANS, LA.

SHEET NUMBER TS1.0

WASTEWATER LIFT STATION TELEMETRY SYSTEM FOR ST. JOHN THE BAPTIST PARISH, LOUISIANA
TITLE SHEET

BKI BURK-KLEINPETER, INC.
ENGINEERS, ARCHITECTS, PLANNERS, ENVIRONMENTAL SCIENTISTS
4176 CANAL STREET, NEW ORLEANS, LA 70119-5984
PHONE (504)486-5901 • FAX (504)488-1714

BKI PROJECT NUMBER NO.13.060

DESIGNED B.M. CHECKED P.H. DETAILED D.R. CHECKED C.V. DATE 11/2014 SHEET OF

NO.	DATE	REVISION DESCRIPTION	BY

XREF:
DATE:
FILE NAME: NO.13.060–TS1.0

STRUCTURAL NOTES

1. DESIGN CRITERIA:

STRUCTURAL DESIGN IS IN ACCORDANCE WITH THE FOLLOWING DOCUMENTS.
INTERNATIONAL BUILDING CODE–2012
AMERICAN SOCIETY OF CIVIL ENGINEERS ASCE 7–10 (WIND LOADS)
AMERICAN CONCRETE INSTITUTE ACI 318–11 (CONCRETE DESIGN)
AMERICAN INSTITUTE OF STEEL CONSTRUCTION MANUAL (13TH EDITION)
AMERICAN WELDING SOCIETY AWS D1.1–2006 (WELDING)

2. DESIGN LOADS:

WIND LOAD:

BASIC DESIGN WIND SPEED 130 MPH IN ACCORDANCE WITH ASCE–7–10

3. DIMENSIONS:

ALL DIMENSIONS ARE HORIZONTAL UNLESS OTHERWISE NOTED ON PLANS, AND MEASURED AT NORMAL TEMPERATURE (68°F). CONTRACTOR TO VERIFY ALL CONDITIONS AND DIMENSIONS IN THE FIELD.

EXISTING DIMENSIONS AND/OR ELEVATIONS ARE APPROXIMATE. CONTRACTOR SHALL VERIFY ACTUAL DIMENSIONS IN THE FIELD.

DIMENSIONS AND/OR ELEVATIONS MARKED THUS (N.T.S.) ARE NOT SHOWN TO SCALE.

DRAWINGS ARE GENERALLY TO SCALE, BUT SHOULD NOT BE SCALED. N.T.S. IS SHOWN ONLY WHERE DRAWING IS OBVIOUSLY OUT OF SCALE.

4. CONCRETE:

DESIGN IS IN ACCORDANCE WITH AMERICAN CONCRETE INSTITUTE ACI 318–11.

ALL CONCRETE WORK SHALL BE IN ACCORDANCE WITH ACI 301, LATEST EDITION.

ALL CONCRETE SHALL BE 4% TO 6% AIR–ENTRAINED CONCRETE.

ALL CONCRETE SHALL HAVE A MIN. 28 DAYS COMPRESSIVE STRENGTH (f'c) OF 4,000 P.S.I. CHAMFER ALL EXPOSED EDGES OF CONCRETE 1".

ALL DETAILING, FABRICATION AND PLACING OF REINFORCING BARS, UNLESS OTHERWISE INDICATED, SHALL BE IN ACCORDANCE WITH ACI–315, "DETAILS AND DETAILING OF CONCRETE REINFORCEMENT", LATEST EDITION.

UNLESS OTHERWISE INDICATED ON THE DRAWINGS, LAPS OF REINFORCEMENT SHALL BE AS SHOWN IN TABLE.

UNLESS OTHERWISE SHOWN ON THE DRAWINGS CONCRETE COVER FOR REINFORCING BARS SHALL BE AS FOLLOWS:

FOR CONCRETE PLACED AGAINST EARTH . . . . 3"

FOR SURFACES IN CONTACT WITH WATER OR WEATHER AND FORMED SURFACES IN CONTACT WITH EARTH . . . . .2"

FOR CONCRETE NOT EXPOSED TO WEATHER, OR IN CONTACT WITH WATER OR EARTH. . .1 1/2"

5. CONSTRUCTION JOINTS:

WHERE CONSTRUCTION JOINTS ARE USED, NOT LESS THAN SEVEN (7) DAYS SHALL HAVE ELAPSED BETWEEN ADJACENT POURS. CONTRACTOR SHALL PROPOSE THE LOCATION OF CONSTRUCTION JOINTS AND SUBMIT TO THE PROJECT ENGINEER FOR REVIEW.

6. STRUCTURAL METALWORK:

UNLESS OTHERWISE INDICATED IN THE PLANS, STRUCTURAL STEEL MATERIALS SHALL CONFORM TO THE FOLLOWING ASTM STANDARDS.

W & WT	A992
CHANNELS, ANGLES	A572 GR. 50
HSS	A500 GR. B
STEEL PIPE	A53 GR. B
PLATES	A572 GR. 50
ANCHOR RODS	F1554 GR. 55
BOLTS	3/4–IN DIA. A325 U.N.O.
NUTS	A563
WASHERS	F436
ELECTRODES	E–70 XX

ANY NECESSARY SUBSTITUTION MUST HAVE PRIOR APPROVAL OF THE PROJECT ENGINEER.

7. WELDING:

WELDING OF ALL STRUCTURAL STEEL SHALL CONFORM TO AWS PUBLICATION D1.1 "STRUCTURAL WELDING CODE".

ALL WELDS THAT ARE TO BE MADE ON ANY STRUCTURAL STEEL MEMBERS SHALL BE ONLY AS SHOWN IN THE STRUCTURAL DRAWINGS, AND SUBJECT TO REVIEW BY THE DESIGN ENGINEER. "ALL WELDS" IS DEFINED AS ANY WELD PLACED FROM INITIATION OF FABRICATION TO FINAL ACCEPTANCE INCLUDING FABRICATION, TRANSPORTATION, ERECTION AND CONSTRUCTION. ALL WELDS SHALL BE CONTINUOUS, UNLESS NOTED OTHERWISE. ALL WELDS SHALL BE MADE WITH E70 ELECTRODES.

8. GALVANIZED STEEL:

ALL MISCELLANEOUS HARDWARE WHICH IS SPECIFIED TO BE GALVANIZED SHALL BE COATED IN ACCORDANCE WITH ASTM A–153.

ALL STRUCTURAL STEEL SHAPES WHICH ARE SPECIFIED TO BE GALVANIZED SHALL BE COATED IN CONFORMANCE WITH ASTM A–123 AFTER FABRICATION.

DAMAGED GALVANIZED COATS THAT ARE NOT TO BE EMBEDDED IN MORE THAN THREE (3) INCHES OF CONCRETE SHALL BE REPAIRED WITH COLD APPLIED ZINC RICH ORGANIC PAINT OR OTHER APPROVED METHOD OF REPAIR.

9. REINFORCING STEEL:

ALL REINFORCING STEEL SHALL BE ASTM A 615, GRADE 60.

DIMENSIONS RELATING TO REINFORCING STEEL FABRICATION ARE OUT TO OUT OF BAR UNLESS OTHERWISE NOTED. DIMENSIONS RELATING TO REINFORCING STEEL SPACING ARE CENTER TO CENTER OF BAR. THE MINIMUM COVERING FROM THE SURFACE OF THE CONCRETE TO THE FACE OF ANY DEFORMED REINFORCING BAR SHALL NOT BE LESS THAN 2", UNLESS OTHERWISE NOTED.

10. STRUCTURAL STEEL

ALL STRUCTURAL STEEL WILL BE FURNISHED AND ERECTED BY THE CONTRACTOR. THE CONTRACTOR WILL ERECT IT AS PER STRUCTURE STEEL SHOP DRAWINGS. THE CONTRACTOR SHALL USE A TEMPLATE FOR COLUMNS, BASE PLATE AND ANCHOR BOLTS.

11. GENERAL NOTE

REFER TO ELECTRICAL DRAWINGS FOR LOCATIONS OF STRUCTURAL SUPPORT ITEMS.

12. DESIGN NOTE

DETAILS AND NOTES SHOWN IN THE STRUCTURAL DRAWINGS ARE CONCEPTUAL DETAILS. ALL STRUCTURAL ELEMENTS SHALL BE DESIGNED BY A REGISTERED PROFESSIONAL CIVIL OR STRUCTURAL ENGINEER REGISTERED IN THE STATE OF LOUISIANA AND STAMPED BY SAME. SUBMIT DESIGNS, INCLUDING DESIGN CALCULATIONS AND DESIGN DRAWINGS, TO THE OWNER/ENGINEER FOR REVIEW PRIOR TO FABRICATION.

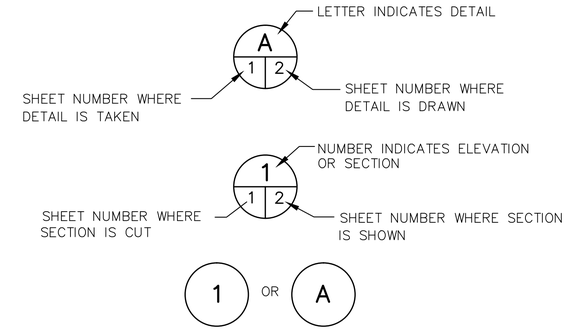

SECTION OR DETAIL ON THE SAME DRAWING

CROSS REFERENCES

STATE OF LOUISIANA
SURENDRAKUMAR I. SHAH
REG. No. 17937
REGISTERED
PROFESSIONAL ENGINEER
ENVIRONMENTAL ENGINEERING
11/21/14

SHEET NUMBER S1.0

WASTEWATER LIFT STATION TELEMETRY SYSTEM FOR ST. JOHN THE BAPTIST PARISH, LOUISIANA
STRUCTURAL NOTES

BKI BURK-KLEINPETER, INC.
ENGINEERS, ARCHITECTS, PLANNERS, ENVIRONMENTAL SCIENTISTS
4176 CANAL STREET, NEW ORLEANS, LA 70119–5994
PHONE (504)486–5901•FAX (504)488–1714

BKI PROJECT NUMBER NO.13.060

DESIGNED	B.M.
CHECKED	P.H.
DETAILED	D.R.
CHECKED	C.V.
DATE	11/2014
SHEET	OF

NO.	DATE	REVISION DESCRIPTION	BY

XREF:
DATE:
FILE NAME: NO.13.060–S1.0

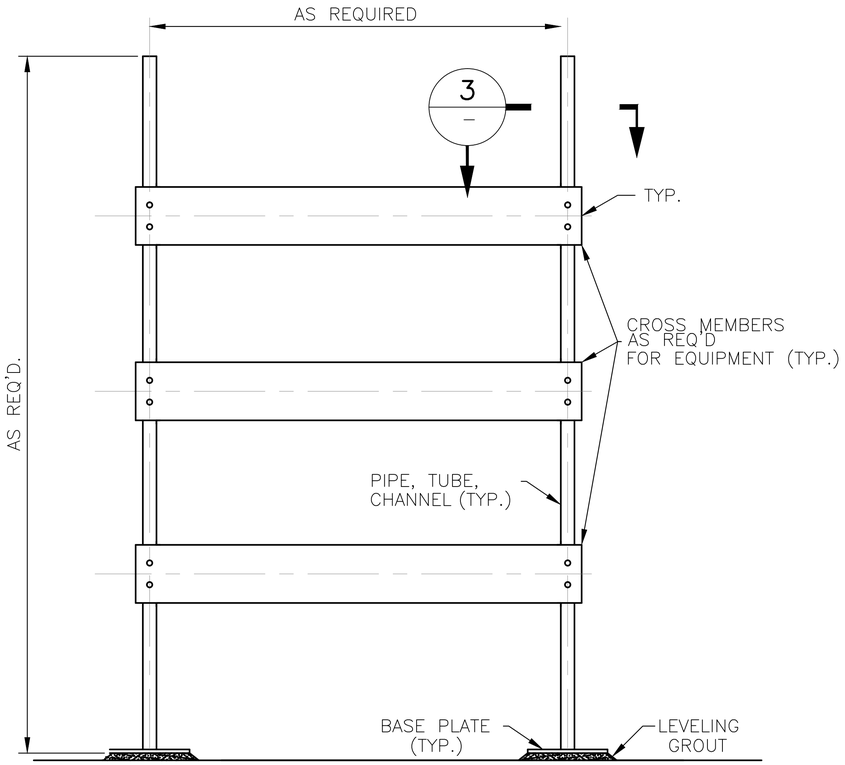

SECTION 2 –

SCALE: N.T.S

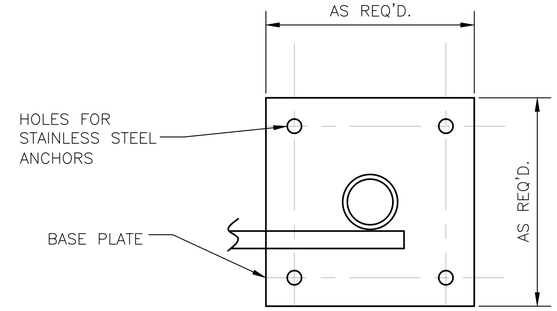

SECTION 3 –

SCALE: N.T.S.

NOTE:

PLATES FOR INSTALLATION ON EXISTING SLABS.
MIN. 4 ANCHOR BOLTS REQUIRED.
MIN. 1/2" DIAMETER ANCHOR BOLTS.

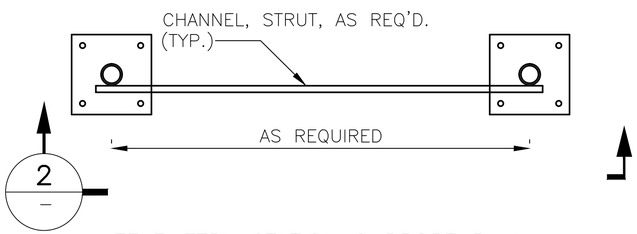

TELEMETRY STATION SUPPORT PLAN

SCALE: N.T.S

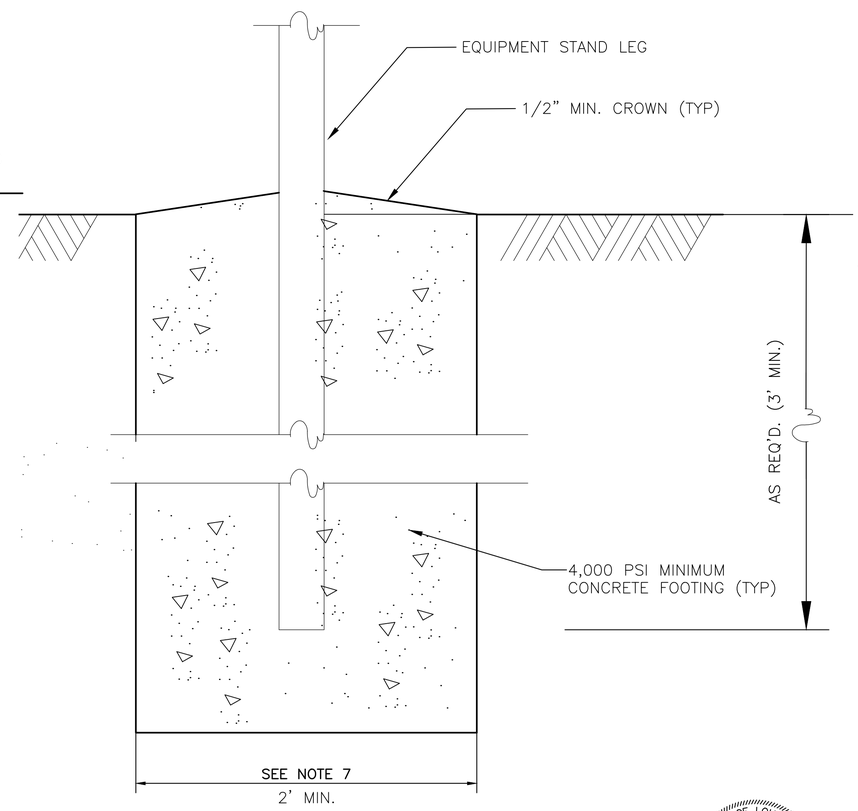

SECTION 5 –

SCALE: N.T.S.

NOTE:

EMBEDDED FOUNDATION WHERE NO EXISTING SLAB.

STATE OF LOUISIANA
SURENDRAKUMAR I. SHAH
REG. No. 17937
REGISTERED
PROFESSIONAL ENGINEER
ENVIRONMENTAL ENGINEERING

11/21/14

SHEET S2.0 NOTES:

1. FOUNDATIONS SHALL BE OF CONCRETE CAST IN PLACE.
2. ALL FOUNDATIONS FOR POLES AND STRUCTURES SHALL BE DESIGNED BY THE CONTRACTOR'S REGISTERED PROFESSIONAL CIVIL ENGINEER LICENSED IN THE STATE OF LOUISIANA AND STAMPED BY SAME. SUBMIT ALL DESIGNS INCLUDING DESIGN CALCULATIONS AND DRAWINGS TO THE OWNER/ENGINEER FOR REVIEW PRIOR TO FABRICATION.
3. ALL STRUCTURAL STEEL WILL BE FURNISHED AND ERECTED BY THE CONTRACTOR. THE CONTRACTOR WILL ERECT IT AS PER DRAWINGS. THE CONTRACTOR SHALL USE A TEMPLATE FOR COLUMNS, BASE PLATE AND ANCHOR BOLTS.
4. ALL STRUCTURAL STEEL WILL BE FURNISHED AND ERECTED BY THE CONTRACTOR. THE CONTRACTOR WILL ERECT IT AS PER STRUCTURE STEEL SHOP DRAWINGS. THE CONTRACTOR SHALL USE A TEMPLATE FOR COLUMNS, BASE PLATE AND ANCHOR BOLTS.
5. DESIGNS SHOWN ON THIS SHEET ARE INTENDED TO BE TYPICAL FOR THE PURPOSE INTENDED. DIMENSIONS SHALL BE ADJUSTED AS NECESSARY TO ACCOMMODATE EQUIPMENT BEING INSTALLED AND SITE CONDITIONS. CONTRACTOR TO VERIFY EQUIPMENT DIMENSIONS PRIOR TO FABRICATION.
6. REFER TO ELECTRICAL DWGS. FOR LOCATIONS OF TELEMETRY STATION.
7. INSTALLERS SHOULD ALWAYS EXCAVATE THE HOLE AT LEAST 6"–8" DEEPER THAN THE DEPTH OF THE ENCLOSURE TO ALLOW FOR THE PLACEMENT OF A MINIMUM 6" OF GRAVEL IN THE BOTTOM OF THE HOLE. THE GRAVEL BASE SHOULD EXTEND 6" BEYOND THE SIDEWALLS OF THE ENCLOSURE.
8. CONTRACTOR MAY ELECT TO REUSE EXISTING OWNER SUPPORT STRUCTURES PROVIDED THE CONTRACTOR'S REGISTERED PROFESSIONAL CIVIL ENGINEER CERTIFIES THAT THE STRUCTURES MEET THE PROJECT WINDS LOADS TAKING INTO CONSIDERATION BOTH EXISTING OWNER MOUNTED EQUIPMENT AND CONTRACTOR INSTALLED EQUIPMENT AT EACH SITE LOCATION.

SHEET NUMBER S2.0

WASTEWATER LIFT STATION
TELEMETRY SYSTEM FOR
ST. JOHN THE BAPTIST PARISH, LOUISIANA
STRUCTURAL DETAILS

BKI BURK-KLEINPETER, INC.
ENGINEERS, ARCHITECTS, PLANNERS, ENVIRONMENTAL SCIENTISTS
4176 CANAL STREET, NEW ORLEANS, LA 70119–5994
PHONE (504)486–5901•FAX (504)488–1714

BKI PROJECT NUMBER NO.13.060

DESIGNED	B.M.
CHECKED	P.H.
DETAILED	D.R.
CHECKED	C.V.
DATE	11/2014
SHEET	OF

NO.	DATE	REVISION DESCRIPTION	BY

XREF:

DATE:

FILE NAME: NO.13.060–S2.0