INDEX TO SHEETS

SHEET NO.	DESCRIPTION
1	TITLE SHEET
2	GENERAL NOTES AND LEGEND
2A	SITE PLAN
3-26	PLAN AND PROFILE SHEETS
27	SIDEWALK REPAIR/ PIPE BEDDING DETAILS/ TEE INLET DETAIL
28	HEADWALL DETAILS
29-30	JUNCTION BOX DETAILS
31	STANDARD SEWER DETAILS
32	STANDARD WATER DETAILS
33	STANDARD SIDEWALK DETAILS
34	CONFLICT BOX DETAILS

RESERVE AREA DRAINAGE IMPROVEMENTS PHASE II PREPARED FOR ST. JOHN THE BAPTIST PARISH

MAY 2019

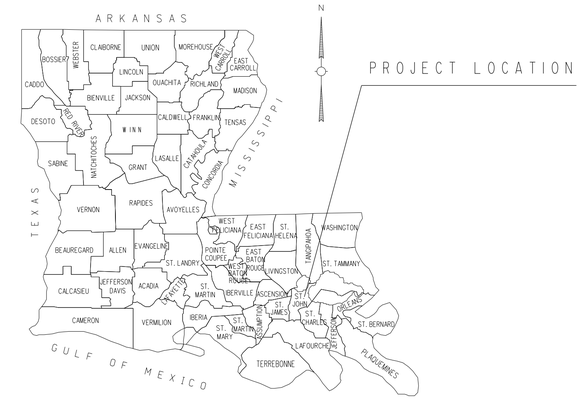

VICINITY MAP

SCALE: N.T.S.

PROJECT LOCATIONS

PROJECT LOCATIONS

LAYOUT MAP

SCALE: N.T.S.

NATALIE ROBOTTOM
PARISH PRESIDENT

LARRY SORAPURU, JR.
COUNCILMAN AT LARGE - DIVISION A

JACLYN HOTARD
COUNCILWOMAN AT LARGE - DIVISION B

KURT BECNEL	DISTRICT 1
JULIA REMONDET	DISTRICT 2
LENNIX MADERE, JR.	DISTRICT 3
MARVIN PERRILLOUX	DISTRICT 4
MICHAEL WRIGHT	DISTRICT 5
LARRY SNYDER	DISTRICT 6
THOMAS MALIK	DISTRICT 7

STATE OF LOUISIANA
RICHARD R. SHREAD
REG. No. 19983
REGISTERED PROFESSIONAL ENGINEER IN CIVIL ENGINEERING
05/21/19

RECOMMENDED FOR APPROVAL

Daron Cooper 05/23/2019
DARON COOPER — DATE
CAPITAL PROJECTS ADMINISTRATOR

PREPARED BY AND RECOMMENDED FOR APPROVAL

Richard R Shread 05/21/19
SHREAD-KUYRKENDALL & ASSOCIATES — DATE

TYPE OF CONSTRUCTION

DRAINAGE CULVERT REPLACEMENT

SHREAD-KUYRKENDALL & ASSOCIATES
ENGINEERS - SURVEYORS - PLANNERS
BATON ROUGE, LOUISIANA

S:\CADD\89091\89091.13\TITLE.DGN

PARISH	SHEET NO.
ST. JOHN	2A

RESERVE AREA DRAINAGE IMPROVEMENTS SITE PLAN

LEGEND:

CONTROL POINT
PHOTO TARGET
PAVEMENT EDGE
SHOULDER EDGE
SLOPE TOE
GUARDRAIL TOP
HIGH BANK
WATER'S EDGE
HIGH WATER MARK
BOX CULVERT
PIPE CULVERT
CATCH BASIN TOP (ROUND)
DROP INLET TOP (ROUND)
DRAINAGE MANHOLE TOP
LEVEE TOP
DITCH CENTERLINE
TREE
WOODS EDGE
MARSH LINE
SWAMP LINE
TREE CLUSTER
HEDGE
BUSH
TREE LINE
FENCE LINE
GATE
CATTLE GUARD
PROPERTY CORNER
RIGHT OF WAY MONUMENT
SECTION CORNER
FENCE CORNER
TELEVISION CABLE
TELEVISION PEDESTAL
POWER POLE
DEADMAN
POWER LINE
POWER JUNCTION BOX
POWER VAULT
TRANSFORMER
COMBINATION POLE
POWER DROP
PIPELINE
PIPELINE VENT
PIPELINE REGULATOR
GAS WELL
OIL WELL
GAS LINE
GAS METER
GAS SERVICE (NO METER)
GAS REGULATOR
GAS RISER
GAS TEST BOX
GAS VALVE
GAS LINE/CASING
GAS VENT
RAILROAD MILEPOST
RAILROAD SIGNAL
RAILROAD SWITCH
RAILROAD TRACK
RR TRAFFIC SIGNAL BOX
SEWER LINE
SEWER MANHOLE TOP
SEWER BLOWOUT VALVE
SEWER CLEANOUT
SEPTIC TANK
SEWER PUMP (PRIVATE)
SEWER TREATMENT (INDIVIDUAL)
FEDERAL AID MARKER
TRAFFIC CONTROLLER BOX
TRAFFIC COUNTER
TRAFFIC SIGNAL
TRAFFIC SIGNAL SUPPORT POLE
LIGHT POLE
LIGHT PEDESTAL
LIGHT POWER VAULT
TRAFFIC SIGN
PARKING METER
TELEPHONE POLE
TELEPHONE LINE
TELEPHONE BOOTH
TELE CROSS CONNECT BOX
TELEPHONE PEDESTAL
TELEPHONE PRESSURE BOX
WATER LINE
WATER LINE/CASING
WATER CLEANOUT
WATER METER
WATER VALVE
WATER VALVE VAULT
WATER WELL
FIRE HYDRANT
BILLBOARD
FUEL PUMP
POST
SIGN POST
STORAGE TANK (ROUND)
GRAVE
MAILBOX
ORNAMENTAL LIGHT
FLAG POLE
FUEL INTAKE PORT
CANOPY SUPPORT

DRAINAGE IMPROVEMENTS

W. 2ND STREET - SHEETS 19-24
TONI STREET - SHEETS 14-18
W. 4TH STREET - SHEETS 11-13
TERRANCE STREET - SHEETS 8-10
W. 8TH STREET - SHEET 3-7

BASE BID
ALTERNATE #1
ALTERNATE #2
ALTERNATE #3

CMP	CORRUGATED METAL PIPE
CMPA	CORRUGATED METAL PIPE ARCH
PVC	POLYVINYL CHLORIDE PIPE
RCB	REINFORCED CONCRETE BOX
RCP	REINFORCED CONCRETE PIPE

STATE OF LOUISIANA
STEVEN P. BREEDING
REG. NO. 28247
REGISTERED PROFESSIONAL ENGINEER
IN
CIVIL ENGINEERING
05/21/19

DATE	DESCRIPTION	BY
	REVISIONS	

GENERAL SITE PLAN

RESERVE AREA
DRAINAGE IMPROVEMENTS
PHASE II

SHREAD - KUYRKENDALL & ASSOC.
ENGINEERS - SURVEYORS - PLANNERS
BATON ROUGE, LOUISIANA

DESIGNED	DRAWN	CHECKED	APPROVED
B.D.N.	J.E.P.	R.W.M.	

S:\CADD\89091\89091\13\GENERAL SITE PLAN.DGN

PARISH	SHEET NO.
ST. JOHN	2

GENERAL NOTES:

1. ALL EXISTING DRAINAGE STRUCTURES ALONG PROPOSED DRAINAGE IMPROVEMENTS SHALL BE REMOVED AND PROPERLY DISPOSED OF UNLESS NOTED OTHERWISE.

2. THE CONTRACTOR SHALL CLEAN OUT ALL EXISTING DRAINAGE PIPES AND STRUCTURES DESIGNATED TO REMAIN (NO DIRECT PAY).

3. CONTRACTOR SHALL ONLY REMOVE AND REPLACE THOSE DRIVEWAYS AND FENCES NECCESSARY FOR PROPER INSTALLATION OF SUBSURFACE DRAINAGE

4. HDPE DRAINAGE PIPE FOR THE USE IN THE CONSTRUCTION OF THE PIPE CULVERTS SHALL BE HIGH-DENSITY POLYETHYLENE, SURE-LOK F477 PIPE AS MANUFACTURED BY HANCOR, INC. OR APPROVED EQUAL.

5. CORRUGATED METAL PIPE AND ARCHES, INCLUDING CONNECTION BANDS AND SADDLE RISER PLATES, FOR THE USE IN THE CONSTRUCTION OF THE PIPE CULVERTS SHALL CONFORM TO THE APPLICABLE REQUIREMENTS OF AASHTO M36.

6. DRAINAGE GATES WHERE REQUIRED AT EXISTING OUTFALL PIPE SHALL BE SPIGOT BACK TYPE AS MANUFACTURED BY WATERMAN OR APPROVED EQUAL. ALL APPURTENANCES REQUIRED FOR PROPER INSTALLATION OF DRAINAGE GATE (I.E. HEADWALLS, ETC.) SHALL BE INCLUDED IN CONTRACTOR'S BID PRICE FOR THIS ITEM.

7. ALL CORRUGATED METAL CROSS DRAIN PIPE SHALL BE BITUMINOUS COATED 14 GAUGE PIPE ON BEDDING MATERIAL, IN ACCORDANCE WITH THE DRAWINGS AND SPECIFICATIONS.

8. GRATE ELEVATIONS SHOWN ON THE PLANS ARE APPROXIMATE. THE ELEVATION OF THE GRATE TOP SHOULD BE PLACE 6" BELOW NATURAL GRADE IF POSSIBLE. ADDITIONALLY, THE GROUND IN THE VICINITY OF THE INLET SHOULD BE BACKFILLED AND GRADED AS NECESSARY TO DRAIN TO THE INLET.

9. CONCRETE DRIVES AND SIDEWALKS SHALL BE SAW CUT OR REMOVED TO THE NEAREST EXISTING JOINT.

10. ROADWAYS AND DRIVES REMOVED FOR PIPE INSTALLATION SHALL BE REPLACED IN-KIND.

11. WHERE NECESSARY, GAS AND WATER HOUSE CONNECTIONS SHALL BE LOWERED TO CLEAR THE DRAINAGE PIPE BY A 1 FOOT MINIMUM.

12. ALL TRENCHES FOR PIPE UNDER THE ROADWAY PAVEMENT SHALL BE BACKFILLED AND COMPACTED ACCORDING TO THE DRAWINGS AND SPECIFICATIONS.

13. CONTRACTOR SHALL ALLOW FOR POSTAL DELIVERY AT ALL TIMES. ANY MAILBOXES MOVED OR DAMAGED SHALL BE REPLACED IN KIND AT NO COST TO THE PARISH.

14. THE ALIGNMENT FOR EACH SHEET IS BASED ON AN ASSUMED COORDINATE SYSTEM.

15. THE LOCATION OF ALL UNDERGROUND UTILITIES SHOWN ON THE PLANS IS APPROXIMATE. PRIOR TO BEGINNING ANY CONSTRUCTION OR EXCAVATION, THE CONTRACTOR SHALL CONTACT THE VARIOUS UTILITY COMPANIES AND PHYSICALLY VERIFY THE EXACT LOCATION AND DEPTH OF ALL UNDERGROUND UTILITIES. THE CONTRACTOR SHALL BE HELD SOLELY RESPONSIBLE FOR ANY DAMAGE OR LIABILITY OCCASIONED BY HIS FAILURE TO COMPLY WITH THESE INSTRUCTIONS.

16. DURING CONSTRUCTION, NO BUSINESS OR RESIDENT SHALL HAVE THEIR ACCESS COMPLETELY BLOCKED. CONSTRUCTION SHALL BE PERFORMED SO AS TO ALLOW ACCESS AT ALL TIMES UNLESS SPECIAL APPROVAL IS GIVEN BY THE PROJECT ENGINEER.

17. ANY DRIVEWAY OR FENCE BROKEN DUE TO THE CONTRACTOR'S NEGLIGENCE, SHALL BE REPAIRED BY THE CONTRACTOR AT NO ADDITIONAL COST TO THE PARISH.

18. CONTRACTOR SHALL BE RESPONSIBLE FOR THE MAINTENANCE OF ALL TRAFFIC DURING CONSTRUCTION AND SHALL COMPLY WITH ALL REGULATIONS TO INSURE THE SAFETY OF THE WORKERS AND THE PUBLIC DURING ALL PHASES OF CONSTRUCTION. CONTRACTOR SHALL DEVELOPED THE TRAFFIC CONTROL PLAN, CERTIFIED BY A REGISTERED PROFESSIONAL ENGINEER IN THE STATE OF LOUISIANA FOR THIS PROJECT.

19. NO WORK SHALL BE PERFORMED ON WEEKENDS OR ON PARISH HOLIDAYS, UNLESS THE CONTRACTOR GIVES 48 HOURS WRITTEN NOTICE TO THE PROJECT ENGINEER AND RECEIVES HIS APPROVAL.

20. ALL GRASS AREAS DISTURBED BY CONSTRUCTION SHALL BE REGRADED TO DRAIN, ALLOWED TO SET UP AND SETTLE, THEN FERTILIZED & SEEDED PER LADOTD REQUIREMENTS.

21. NOTE: ALL PIPE SLOPES TO BE 0.1% UNLESS OTHERWISE NOTED.

22. TOP OF CONCRETE (T.O.C.) ELEVATIONS FOR CATCH BASINS ARE GIVEN FOR REFERENCE ONLY. CONTRACTOR TO FIELD VERIFY ELEVATIONS IN ORDER TO DRAIN PROPERLY.

23. ALL DRIVEWAYS AND SIDEWALKS ARE CONCRETE UNLESS OTHERWISE NOTED.

24. CB-01, CB-02, 8" YARD DRAIN (CB-05) WITH PIPE, 12" YARD DRAIN (SIMILAR TO CB-05), MC-01, AND MH-06 REFER TO LADOTD CURRENT STANDARD DETAILS.

25. UNLESS OTHERWISE NOTED, ALL STREETS ARE ASPHALTIC CONCRETE.

LEGEND:

CONTROL POINT
PHOTO TARGET
PAVEMENT EDGE
SHOULDER EDGE
SLOPE TOE
GUARDRAIL TOP
HIGH BANK
WATER'S EDGE
HIGH WATER MARK
BOX CULVERT
PIPE CULVERT
CATCH BASIN TOP (ROUND)
DROP INLET TOP (ROUND)
DRAINAGE MANHOLE TOP
LEVEE TOP
DITCH CENTERLINE
TREE
WOODS EDGE
MARSH LINE
SWAMP LINE
TREE CLUSTER
HEDGE
BUSH
TREE LINE
FENCE LINE
GATE
CATTLE GUARD
PROPERTY CORNER
RIGHT OF WAY MONUMENT
SECTION CORNER
FENCE CORNER
TELEVISION CABLE
TELEVISION PEDESTAL
POWER POLE
DEADMAN
POWER LINE
POWER JUNCTION BOX
POWER VAULT
TRANSFORMER
COMBINATION POLE
POWER DROP
PIPELINE
PIPELINE VENT
PIPELINE REGULATOR
GAS WELL
OIL WELL

GAS LINE
GAS METER
GAS SERVICE (NO METER)
GAS REGULATOR
GAS RISER
GAS TEST BOX
GAS VALVE
GAS LINE/CASING
GAS VENT
RAILROAD MILEPOST
RAILROAD SIGNAL
RAILROAD SWITCH
RAILROAD TRACK
RR TRAFFIC SIGNAL BOX
SEWER LINE
SEWER MANHOLE TOP
SEWER BLOWOUT VALVE
SEWER CLEANOUT
SEPTIC TANK
SEWER PUMP (PRIVATE)
SEWER TREATMENT (INDIVIDUAL)
FEDERAL AID MARKER
TRAFFIC CONTROLLER BOX
TRAFFIC COUNTER
TRAFFIC SIGNAL
TRAFFIC SIGNAL SUPPORT POLE
LIGHT POLE
LIGHT PEDESTAL
LIGHT POWER VAULT
TRAFFIC SIGN
PARKING METER
TELEPHONE POLE
TELEPHONE LINE
TELEPHONE BOOTH
TELE CROSS CONNECT BOX
TELEPHONE PEDESTAL
TELEPHONE PRESSURE BOX
WATER LINE
WATER LINE/CASING
WATER CLEANOUT
WATER METER
WATER VALVE
WATER VALVE VAULT
WATER WELL
FIRE HYDRANT
BILLBOARD
FUEL PUMP
POST
SIGN POST
STORAGE TANK (ROUND)
GRAVE
MAILBOX
ORNAMENTAL LIGHT
FLAG POLE
FUEL INTAKE PORT
CANOPY SUPPORT

CMP	CORRUGATED METAL PIPE
CMPA	CORRUGATED METAL PIPE ARCH
PVC	POLYVINYL CHLORIDE PIPE
RCB	REINFORCED CONCRETE BOX
RCP	REINFORCED CONCRETE PIPE

STATE OF LOUISIANA
STEVEN P. BREEDING
REG. NO. 28247
REGISTERED
PROFESSIONAL ENGINEER
IN
CIVIL ENGINEERING
05/21/19

DATE	DESCRIPTION	BY

REVISIONS

GENERAL NOTES

RESERVE AREA
DRAINAGE IMPROVEMENTS
PHASE II

SHREAD - KUYRKENDALL & ASSOC.
ENGINEERS - SURVEYORS - PLANNERS
BATON ROUGE, LOUISIANA

DESIGNED	DRAWN	CHECKED	APPROVED
B.D.N.	J.E.P.	R.W.M.	

S:\CADD\8909\890913\GENERAL NOTES.DGN

PARISH	SHEET NO.
ST. JOHN	3

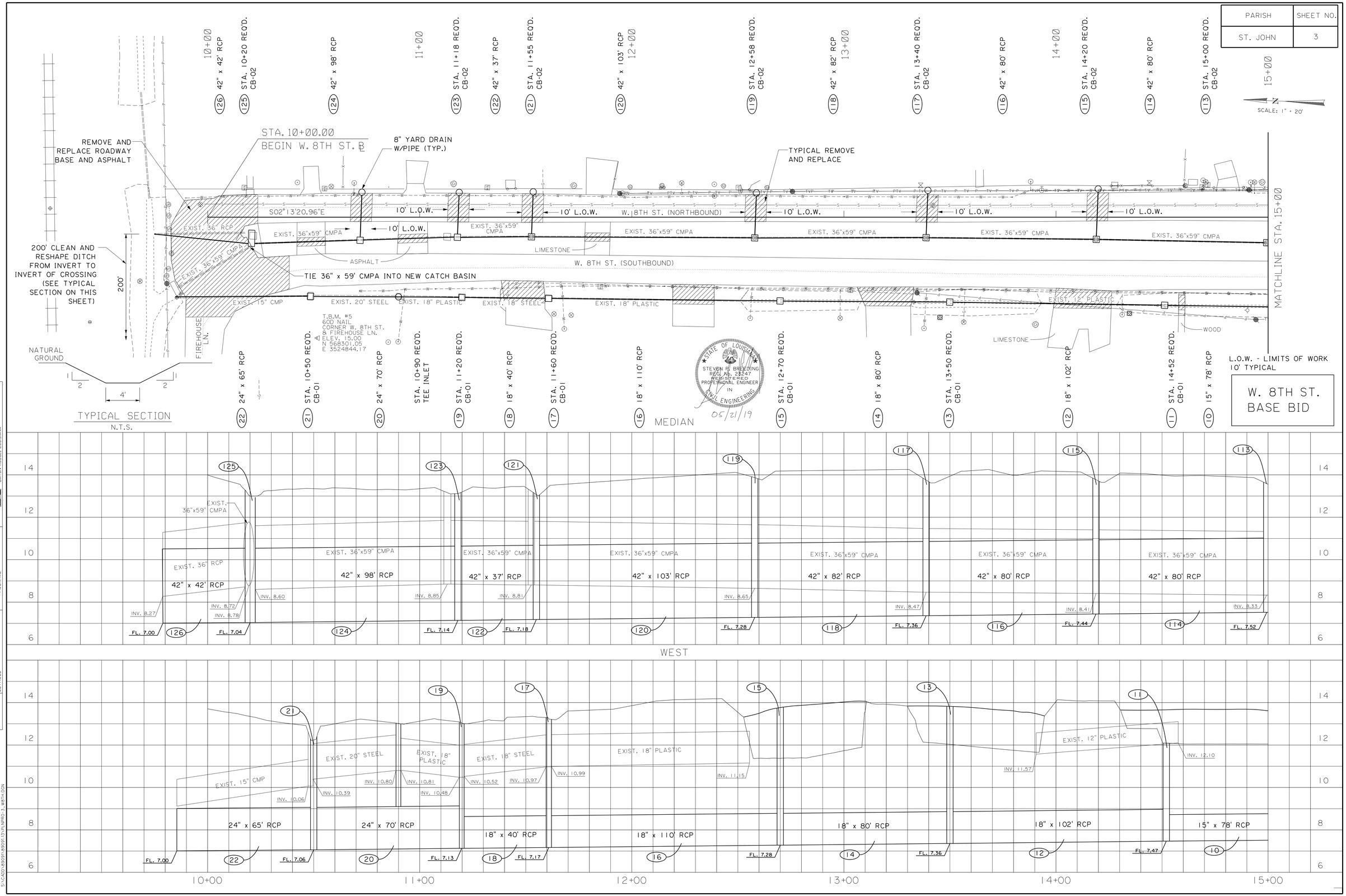

SHREAD - KUYKENDALL & ASSOC.
CONSULTING ENGINEERS - PLANNERS
BATON ROUGE, LOUISIANA

GRAPHICS AREA J.E.P.
FILENAME

SURVEY A.D.S.
CHECKED
DETAILED

S:\CADD\89091\89091\13-PL\PRO-3_W8TH.DGN

PARISH	SHEET NO.
ST. JOHN	4

SCALE: 1" = 20'

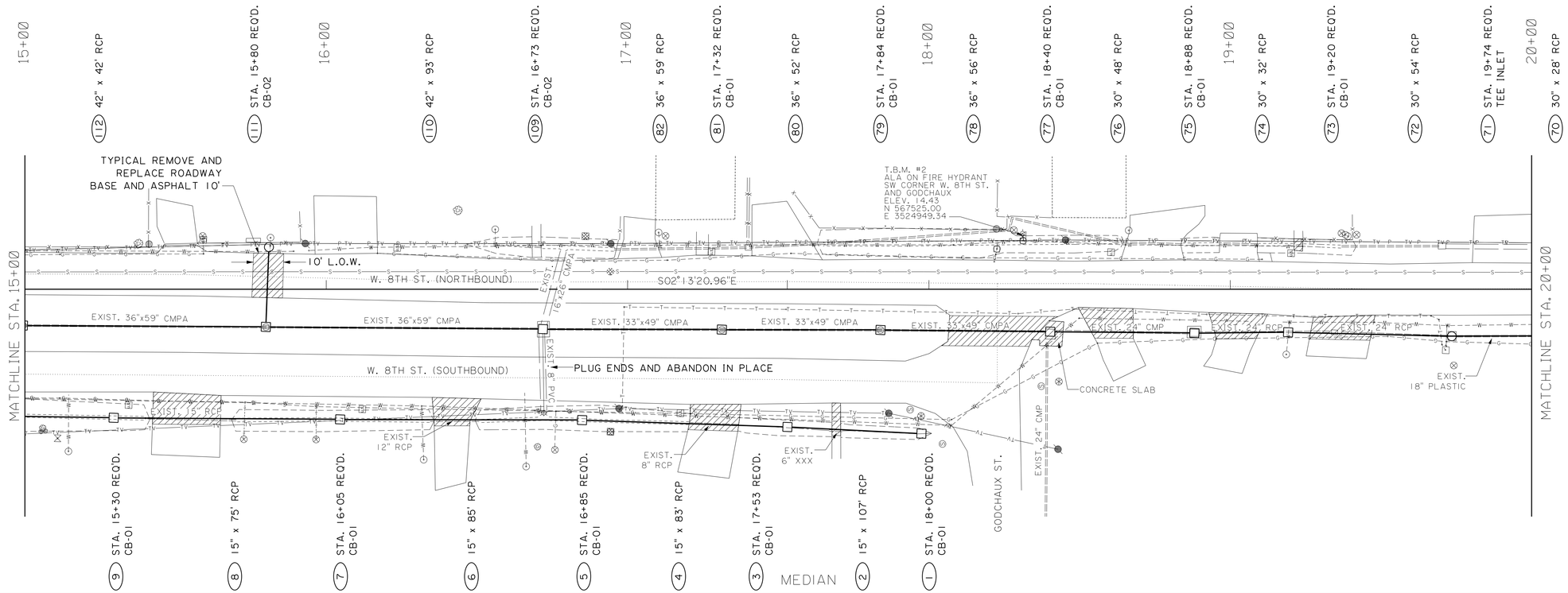

STATE OF LOUISIANA
STEVEN R. BREEDING
REG. No. 28247
REGISTERED PROFESSIONAL ENGINEER IN CIVIL ENGINEERING
05/21/19

W. 8TH ST.
BASE BID

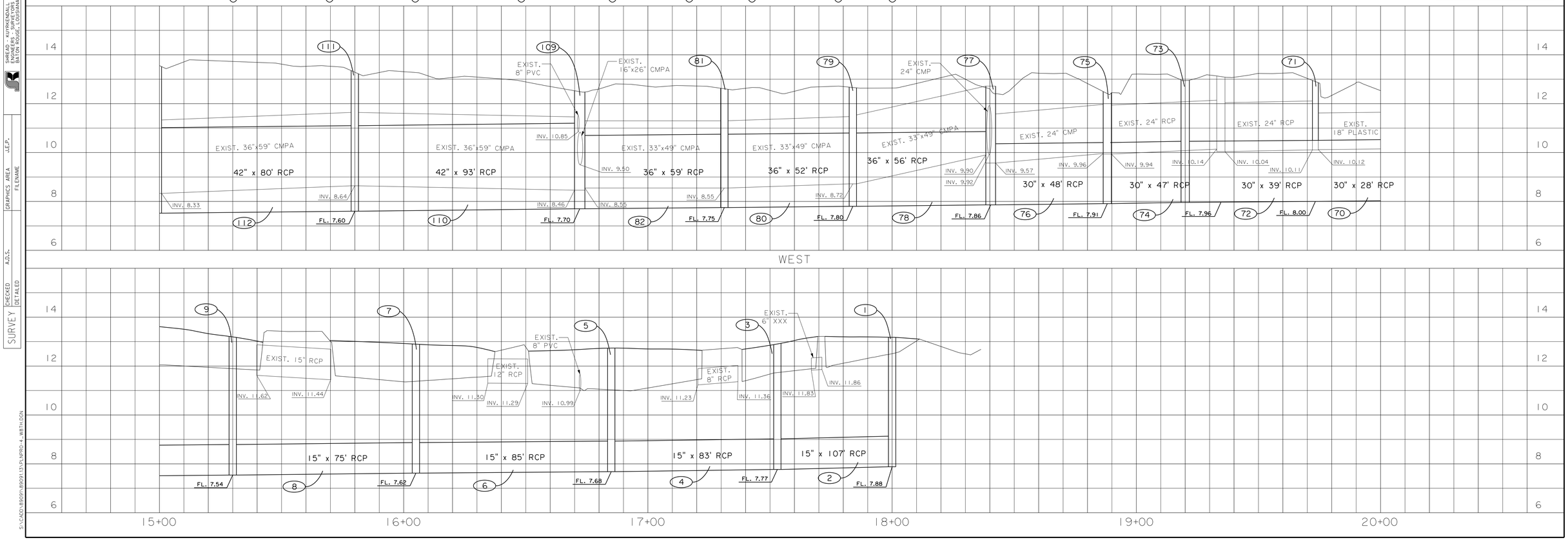

SURVEY
CHECKED
DETAILED
A.D.S.
GRAPHICS AREA
FILENAME
J.E.P.
SHREAD - KUYKENDALL & ASSOC.
CONSULTING ENGINEERS - PLANNERS
BATON ROUGE, LOUISIANA

S:\CADD\89091\89091\13-PL\PRO-4_W8TH.DGN

PARISH	SHEET NO.
ST. JOHN	4a

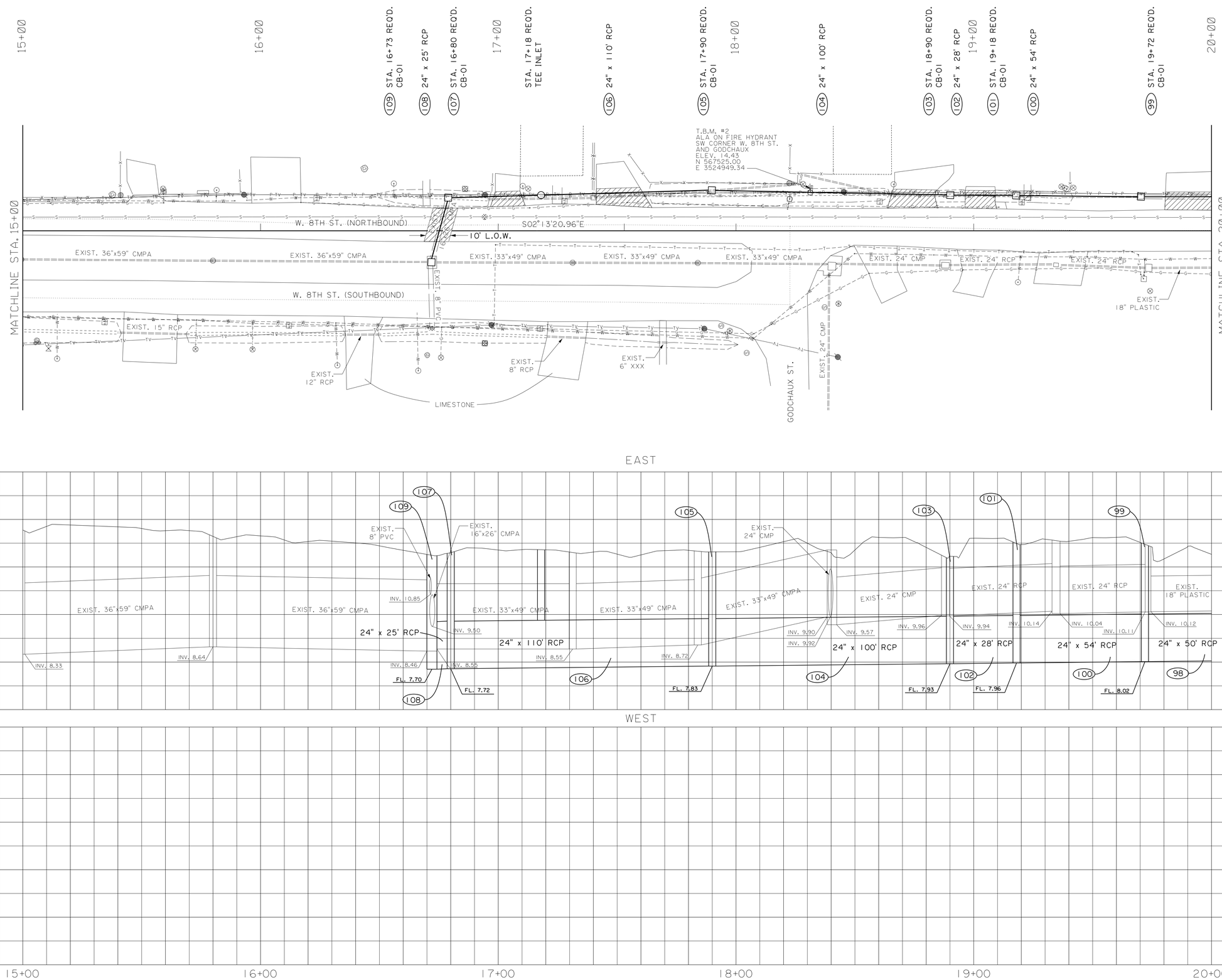

STATE OF LOUISIANA
STEVEN P. BREEDING
REG. No. 23247
REGISTERED PROFESSIONAL ENGINEER
IN
CIVIL ENGINEERING
05/21/19

W. 8TH ST.
BASE BID

SHREAD - KUYRKENDALL & ASSOC.
ENGINEERS - SURVEYORS - PLANNERS
BATON ROUGE, LOUISIANA

SURVEY
CHECKED A.D.S.
DETAILED
GRAPHICS AREA J.E.P.
FILENAME

S:\CADD\89091\89091.13\PLNPRO-4a_W8TH.DGN

PARISH	SHEET NO.
ST. JOHN	5

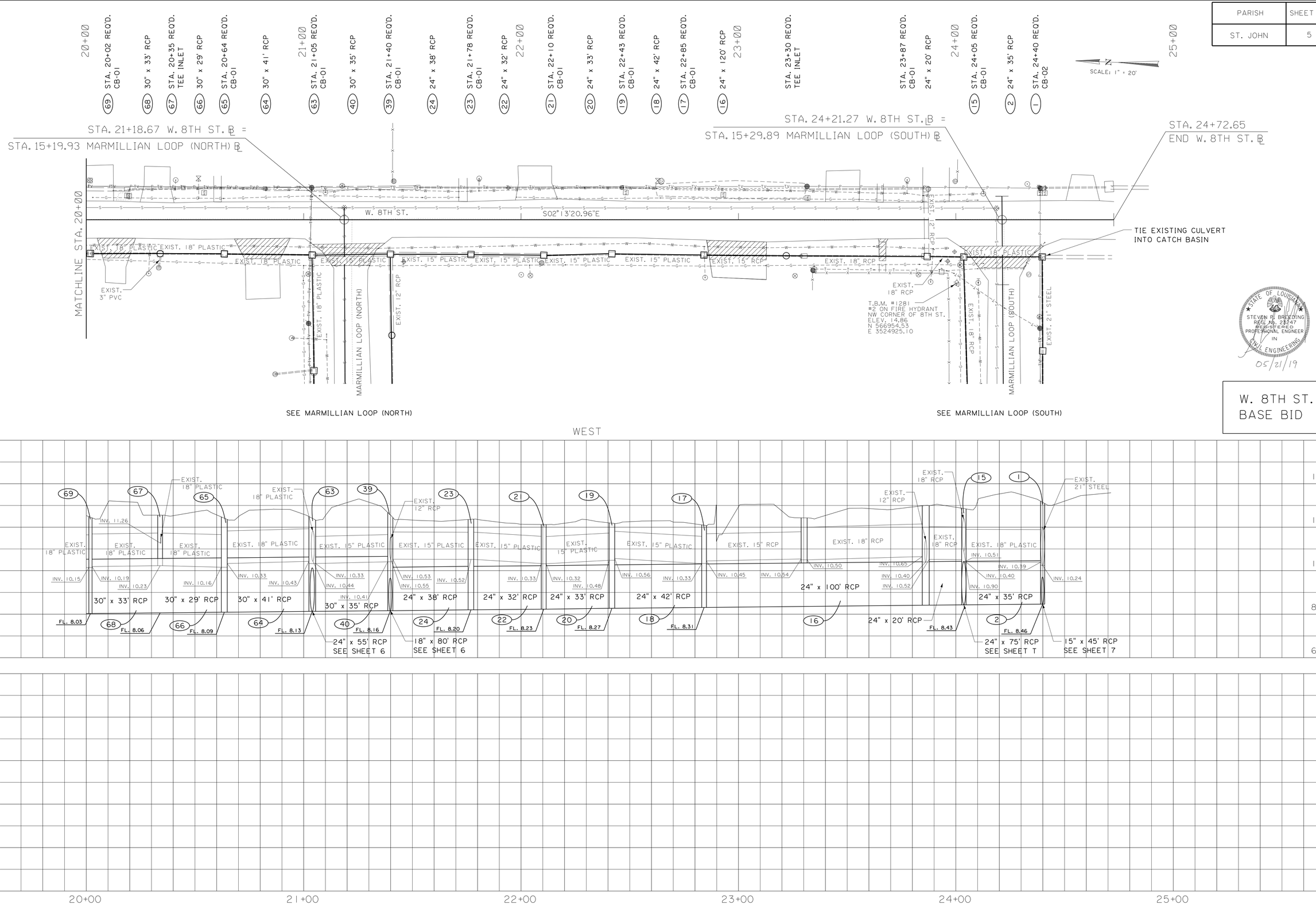

SHEAD - KUYKENDALL & ASSOC.
CIVIL ENGINEERS - LAND PLANNERS
BATON ROUGE, LOUISIANA

SURVEY		GRAPHICS AREA	J.E.P.
CHECKED	A.D.S.	FILENAME	
DETAILED			

S:\CADD\8909\8909.133\PLNPRD-S_W8TH.DGN

PARISH	SHEET NO.
ST. JOHN	5a

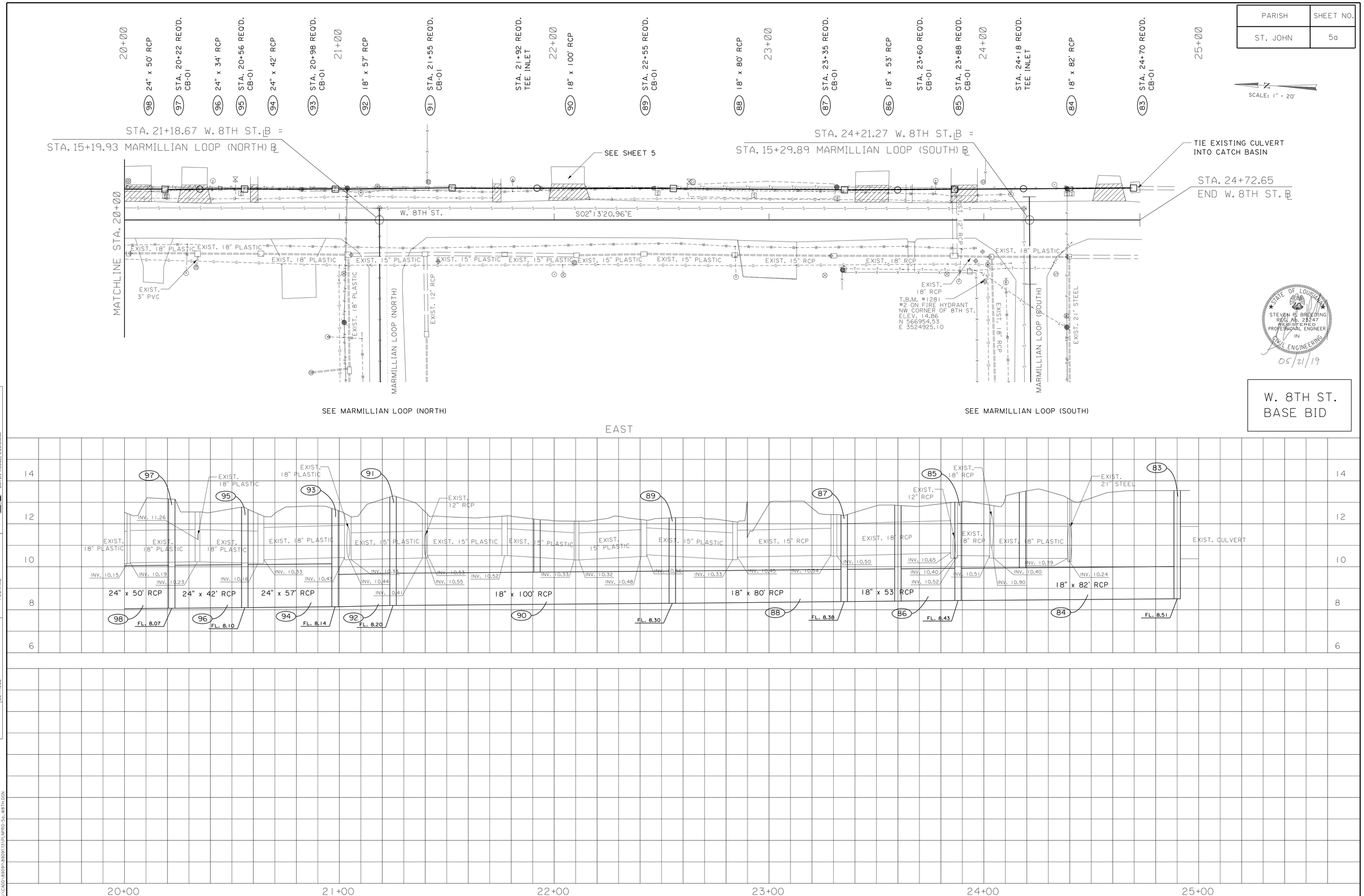

STATE OF LOUISIANA
STEVEN P. BREEDING
REG. No. 23247
REGISTERED PROFESSIONAL ENGINEER
IN
CIVIL ENGINEERING
05/21/19

W. 8TH ST.
BASE BID

SHREAD - KUYRKENDALL & ASSOC.
ENGINEERS - SURVEYORS - PLANNERS
BATON ROUGE, LOUISIANA

SURVEY
CHECKED A.D.S.
DETAILED
GRAPHICS AREA J.E.P.
FILENAME

S:\CADD\89091\89091.13\PLNPRO-5a_W8TH.DGN

PARISH	SHEET NO.
ST. JOHN	6

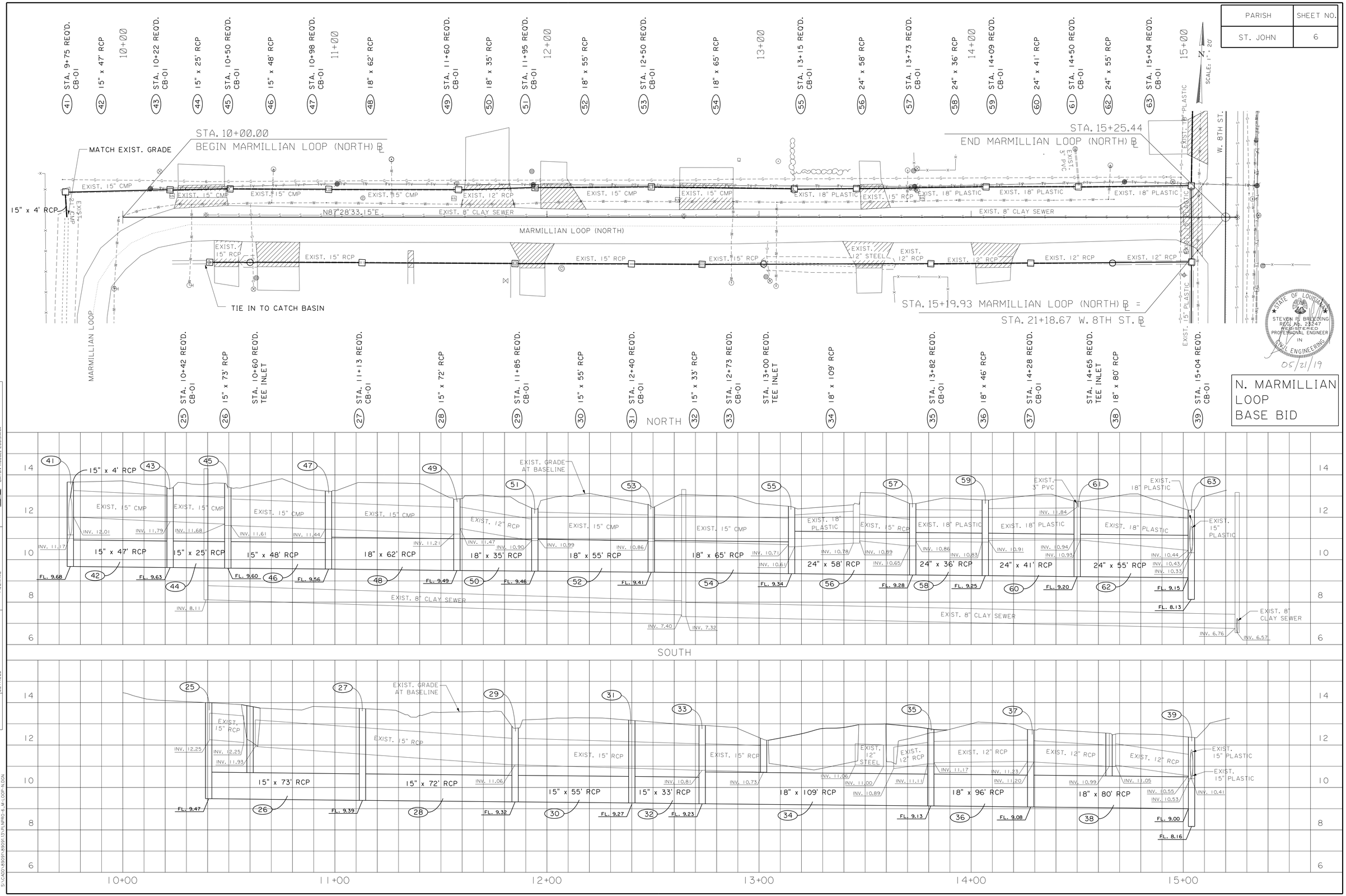

PARISH	SHEET NO.
ST. JOHN	7

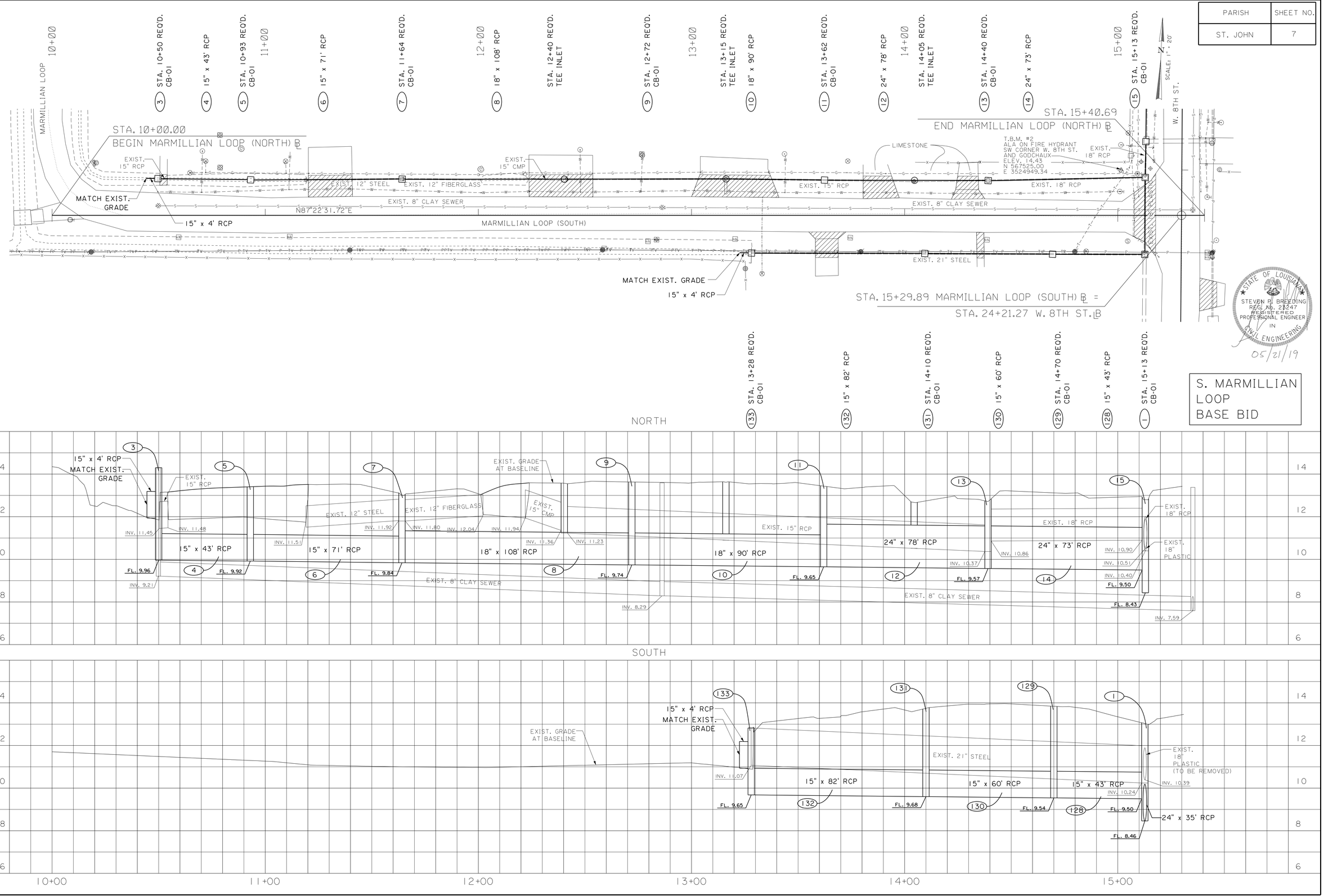

S. MARMILLIAN LOOP BASE BID

SHREAD - KUYRKENDALL & ASSOC.
ENGINEERS - SURVEYORS - PLANNERS
BATON ROUGE, LOUISIANA

SURVEY
CHECKED A.D.S.
DETAILED
GRAPHICS AREA J.E.P.
FILENAME

S:\CADD\89091\89091.13\PLNPRO-7_M-LOOP-S.DGN

PARISH	SHEET NO.
ST. JOHN	8

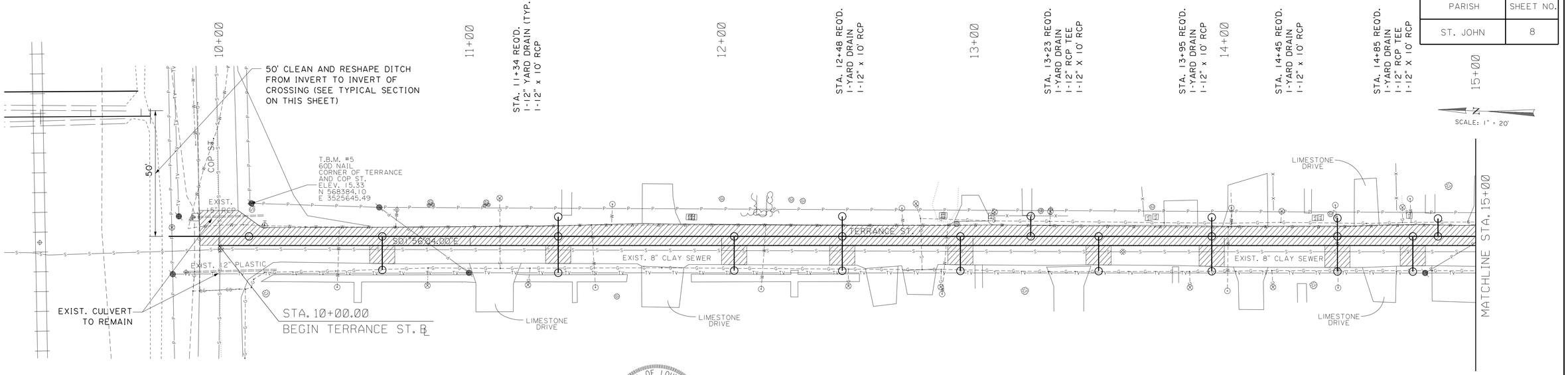

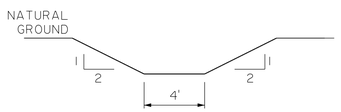

TYPICAL SECTION
N.T.S.

STA. 10+65 REQ'D.
1-12" RCP TEE
1-YARD DRAIN
1-12" x 18' RCP

STA. 11+35 REQ'D.
1-DRAINAGE MH
1-YARD DRAIN
1-12" x 18' RCP

STATE OF LOUISIANA
STEVEN R. BREEDING
REG. No. 28247
REGISTERED
PROFESSIONAL ENGINEER
IN
CIVIL ENGINEERING
05/21/19

STA. 12+05 REQ'D.
1-12" RCP TEE
1-YARD DRAIN
1-12" x 18' RCP

STA. 12+48 REQ'D.
1-DRAINAGE MH
1-YARD DRAIN
1-12" x 18' RCP

STA. 12+95 REQ'D.
1-12" RCP TEE
1-YARD DRAIN
1-12" x 18' RCP

STA. 13+50 REQ'D.
1-12" RCP TEE
1-YARD DRAIN
1-12" x 18' RCP

STA. 13+95 REQ'D.
1-DRAINAGE MH
1-YARD DRAIN
1-12" x 18' RCP

STA. 14+45 REQ'D.
1-DRAINAGE MH
1-YARD DRAIN
1-12" x 18' RCP

STA. 14+75 REQ'D.
1-12" RCP TEE
1-YARD DRAIN
1-12" x 18' RCP

L.O.W. - LIMITS OF WORK
10' TYPICAL

TERRANCE ST. ALTERNATE #2

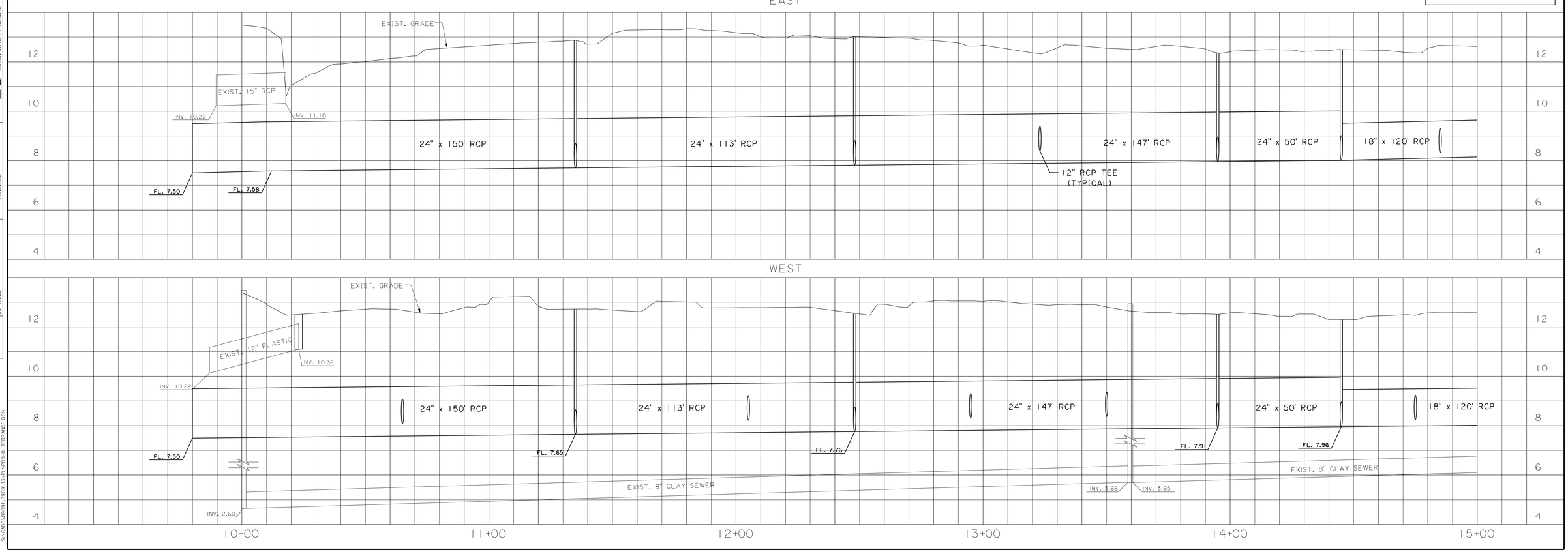

SHREAD - KUYRENDALL & ASSOC.
CIVIL & STRUCTURAL PLANNERS
BATON ROUGE, LOUISIANA

SURVEY | CHECKED | A.D.S. | DETAILED
GRAPHICS AREA | J.E.P. | FILENAME

S:\CADD\89091\89091131\DWRD\8_TERRANCE.DGN

PARISH	SHEET NO.
ST. JOHN	9

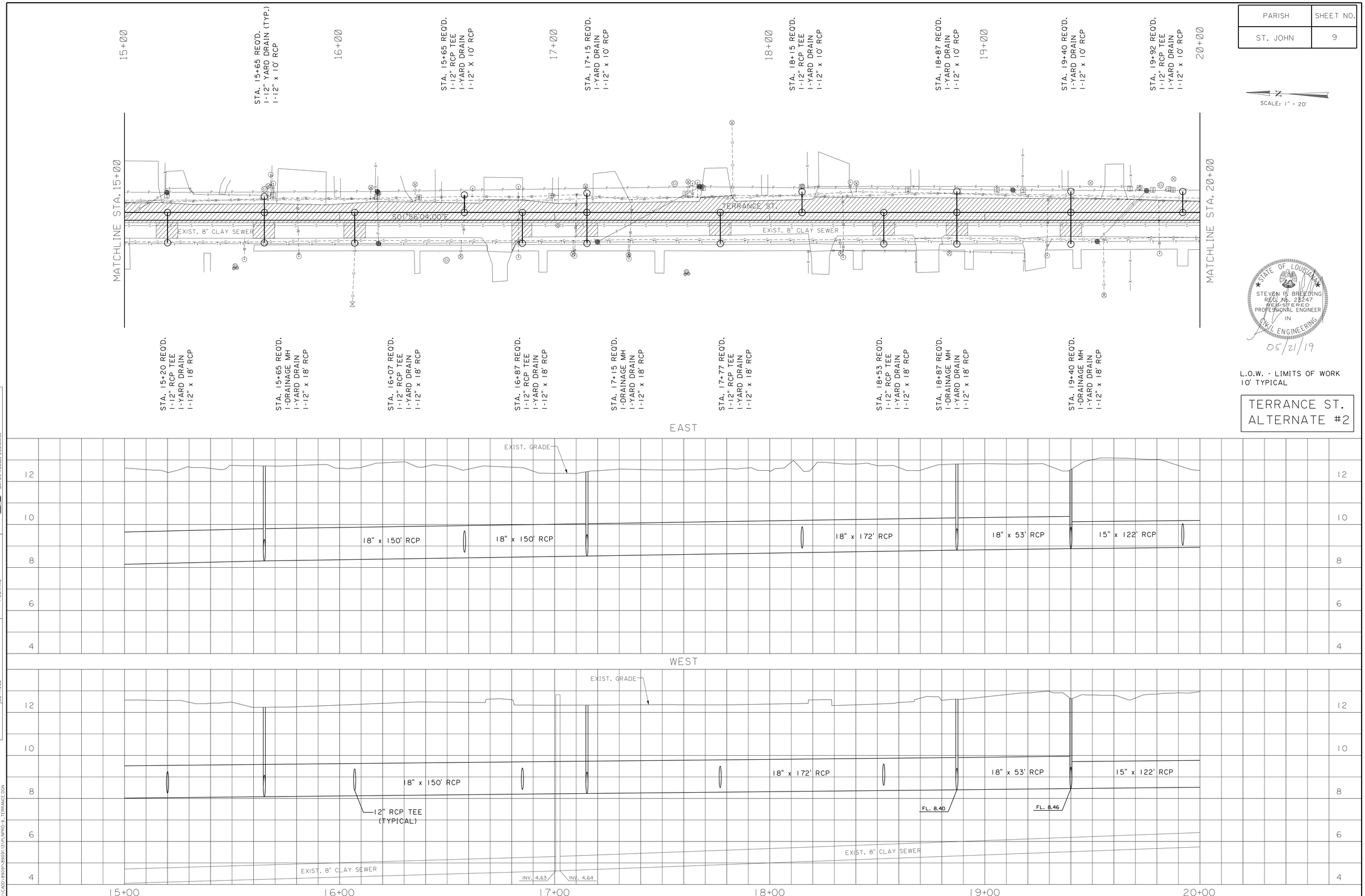

SCALE: 1" = 20'

STATE OF LOUISIANA
STEVEN P. BREEDING
REG. No. 23247
REGISTERED PROFESSIONAL ENGINEER
IN
CIVIL ENGINEERING

05/21/19

L.O.W. - LIMITS OF WORK
10' TYPICAL

TERRANCE ST.
ALTERNATE #2

SHREAD - KUYRKENDALL & ASSOC.
ENGINEERS - SURVEYORS - PLANNERS
BATON ROUGE, LOUISIANA

SURVEY
CHECKED A.D.S.
DETAILED
GRAPHICS AREA J.E.P.
FILENAME

S:\CADD\89091\89091.13\PLNPRO-9_TERRANCE.DGN

PARISH	SHEET NO.
ST. JOHN	10

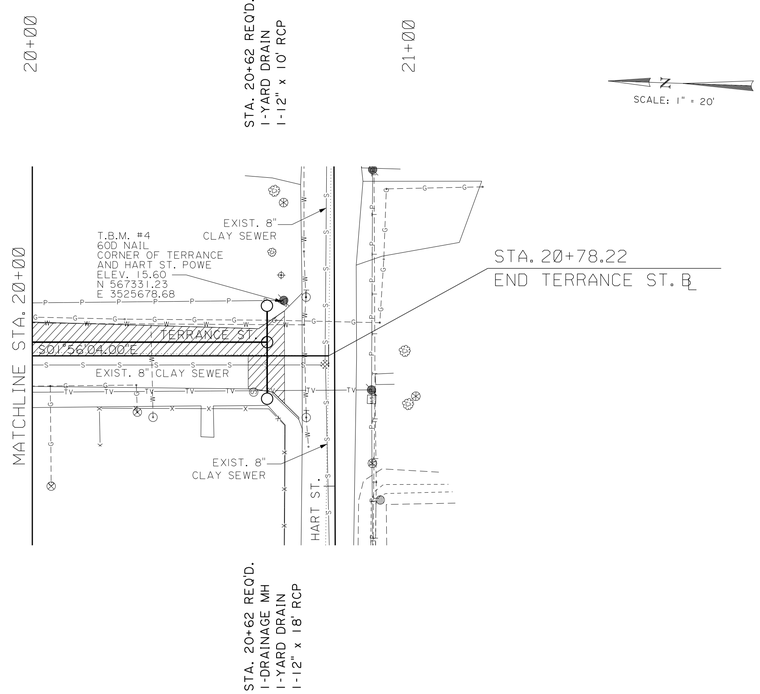

STATE OF LOUISIANA
STEVEN P. BREEDING
REG. No. 23247
REGISTERED
PROFESSIONAL ENGINEER
IN
CIVIL ENGINEERING
05/21/19

L.O.W. - LIMITS OF WORK
10' TYPICAL

TERRANCE ST.
ALTERNATE #2

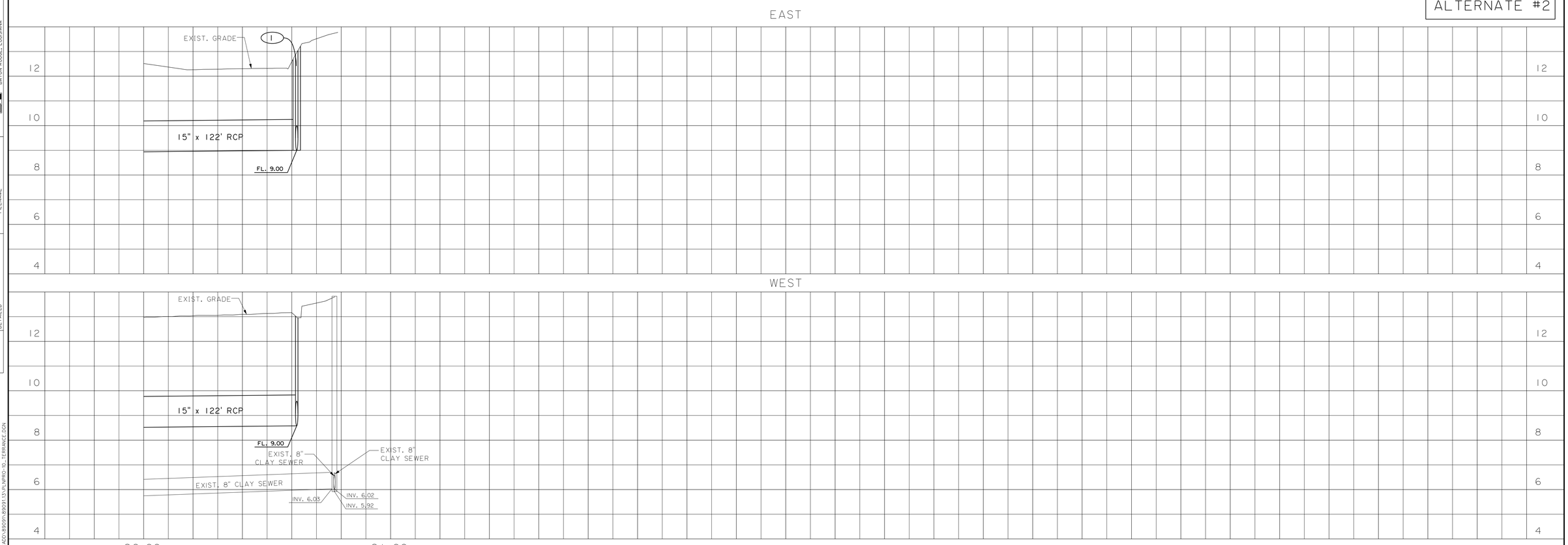

SHREAD - KUYRKENDALL & ASSOC.
ENGINEERS - SURVEYORS - PLANNERS
BATON ROUGE, LOUISIANA

SURVEY
CHECKED A.D.S.
DETAILED
GRAPHICS AREA J.E.P.
FILENAME

S:\CADD\89091\89091.13\PLNPRO-10_TERRANCE.DGN

PARISH	SHEET NO.
ST. JOHN	11

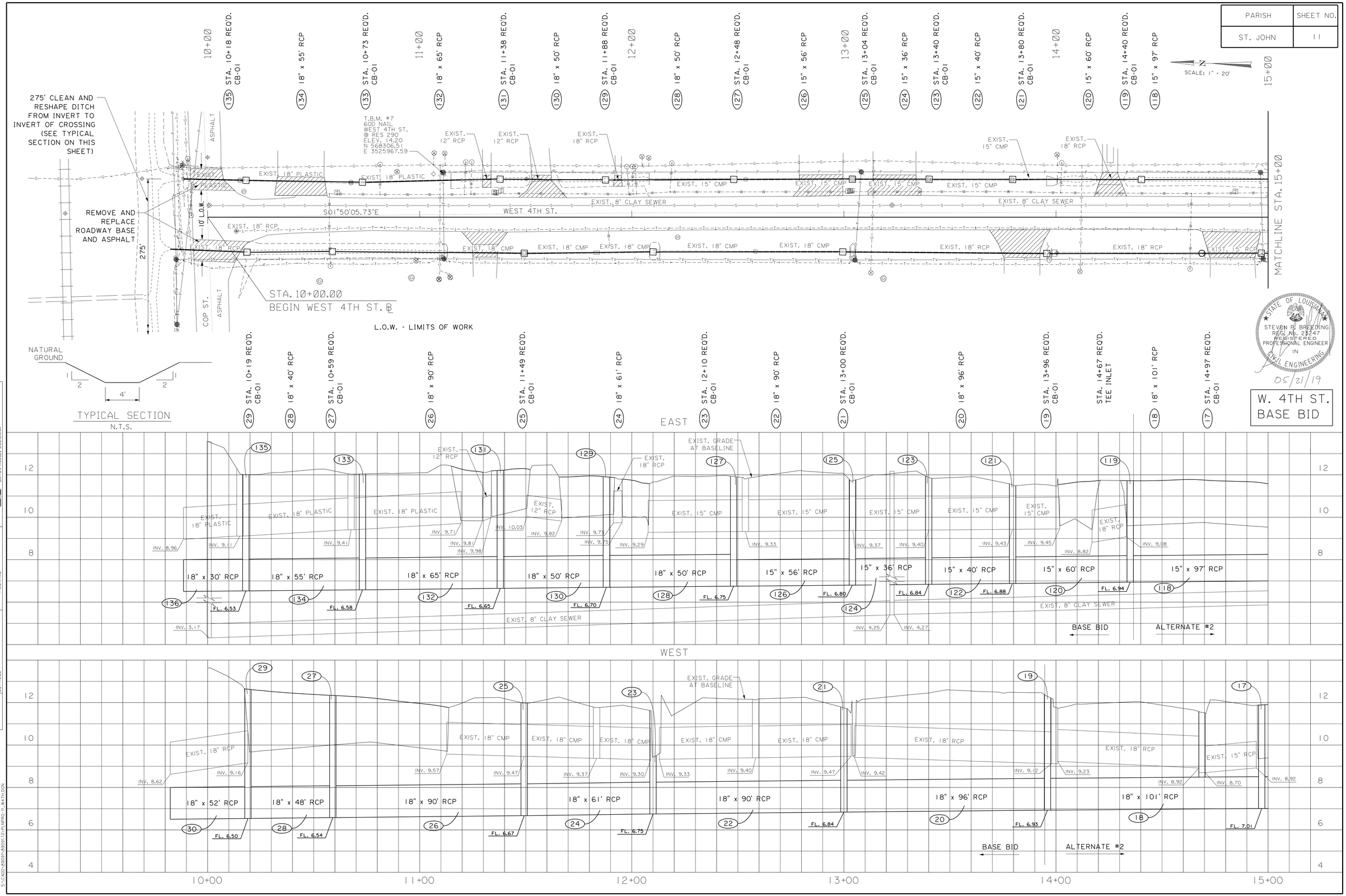

SHREAD - KUYRKENDALL & ASSOC.
ENGINEERS - SURVEYORS - PLANNERS
BATON ROUGE, LOUISIANA

SURVEY
CHECKED A.D.S.
DETAILED
GRAPHICS AREA J.E.P.
FILENAME

S:\CADD\89091\89091.13\PLNPRO-11_W4TH.DGN

PARISH	SHEET NO.
ST. JOHN	12

SCALE: 1" = 20'

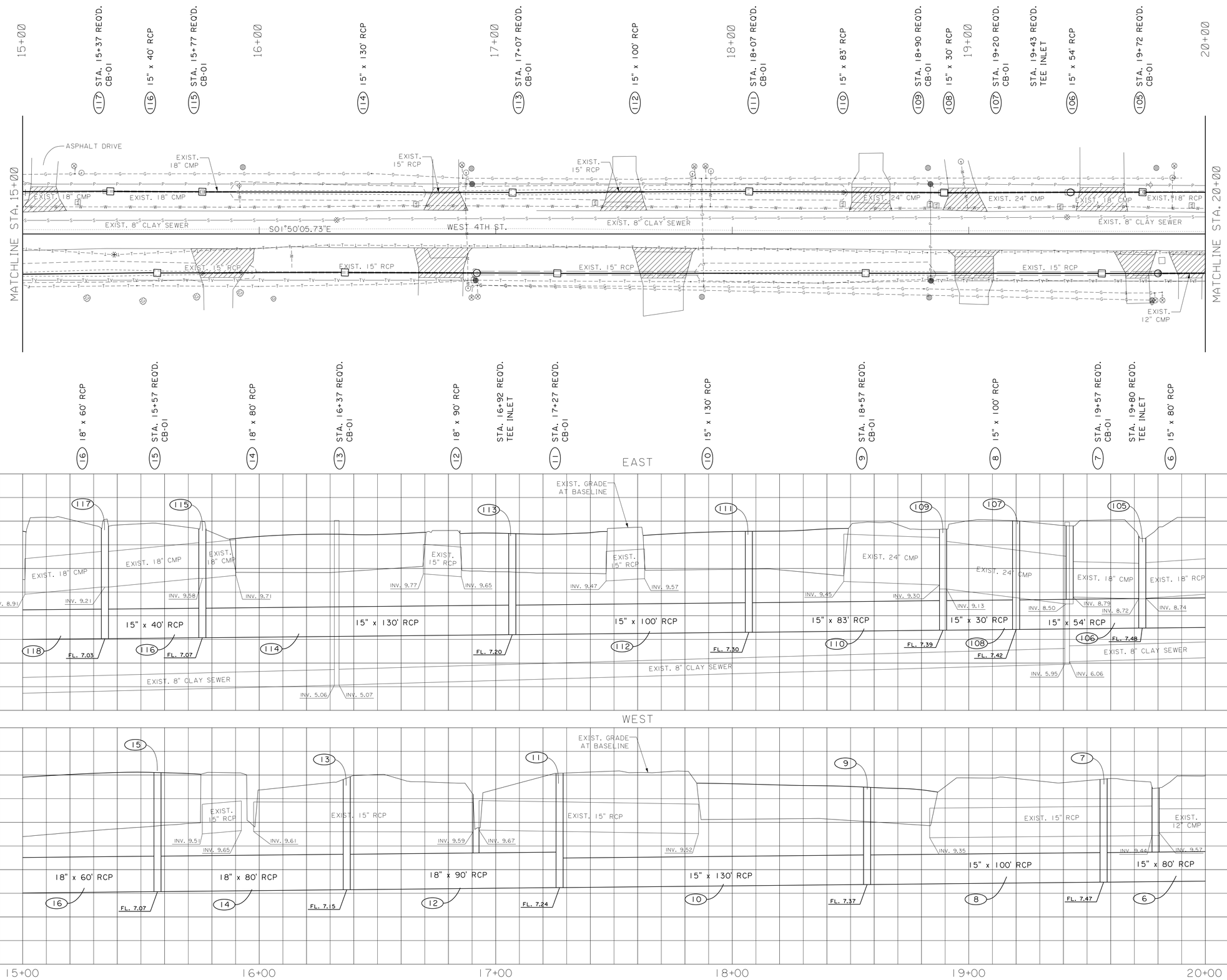

STATE OF LOUISIANA
STEVEN R. BREEDING
REG. NO. 28247
REGISTERED PROFESSIONAL ENGINEER IN CIVIL ENGINEERING
05/21/19

W. 4TH ST.
BASE BID

SHREAD - KUYKENDALL & ASSOC.
CONSULTING ENGINEERS - PLANNERS
BATON ROUGE, LOUISIANA

SURVEY | CHECKED | DETAILED | A.D.S. | GRAPHICS AREA | FILENAME | J.E.P.

S:\CADD\89091\89091\13-PL\PRO-12_W4TH.DGN

PARISH	SHEET NO.
ST. JOHN	13

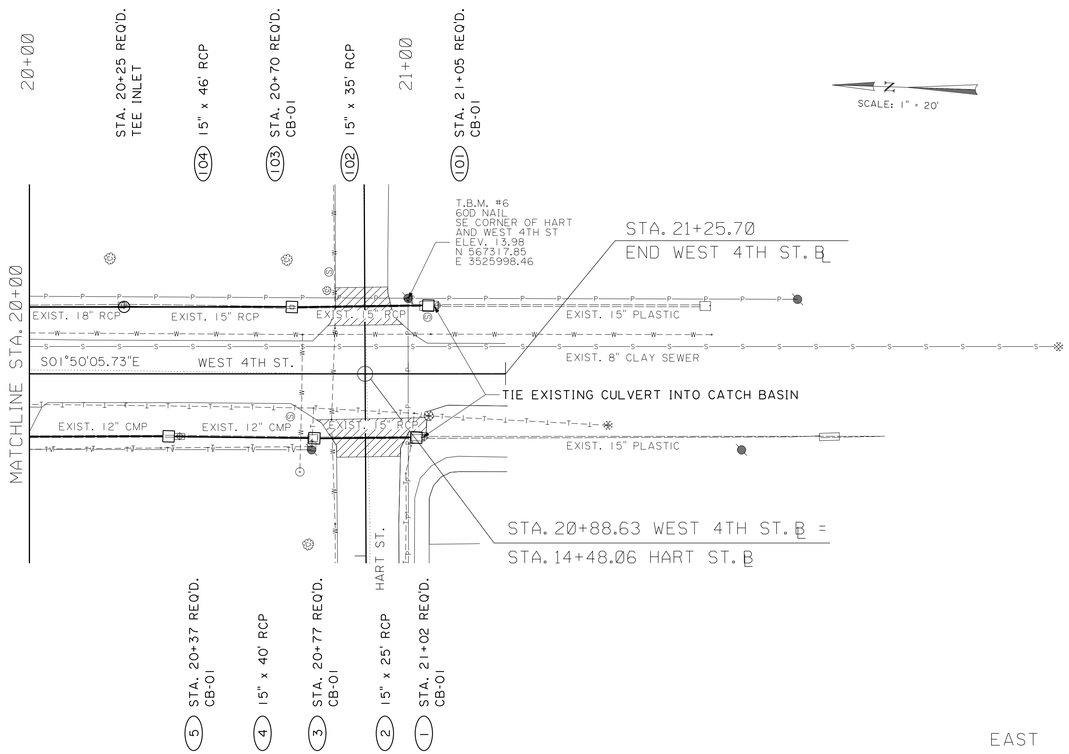

STATE OF LOUISIANA
STEVEN R. BREEDING
REG. No. 23247
REGISTERED
PROFESSIONAL ENGINEER
IN
CIVIL ENGINEERING
05/21/19

W. 4TH ST.
BASE BID

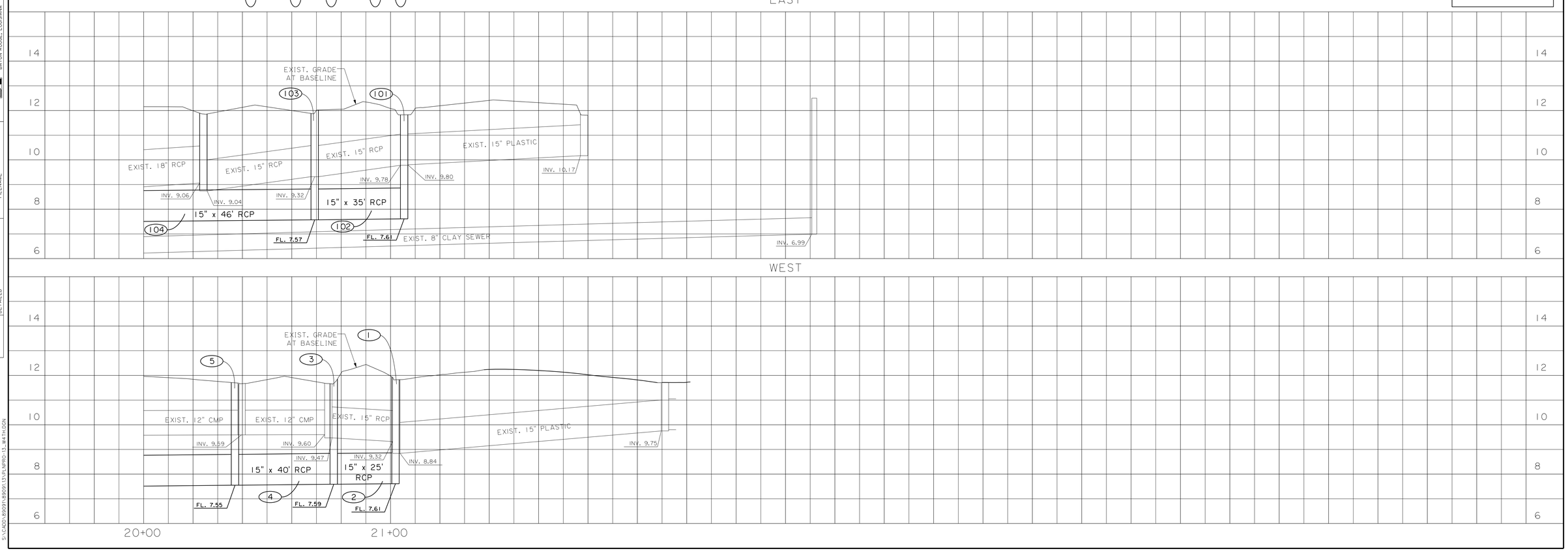

SURVEY
CHECKED
DETAILED
A.D.S.
GRAPHICS AREA
FILENAME
J.E.P.

SHREAD - KUYKENDALL & ASSOC.
ENGINEERS, PLANNERS & PLANNERS
BATON ROUGE, LOUISIANA

S:\CADD\89091\89091-13\R\NPRO-13_W4TH.DGN

PARISH	SHEET NO.
ST. JOHN	14

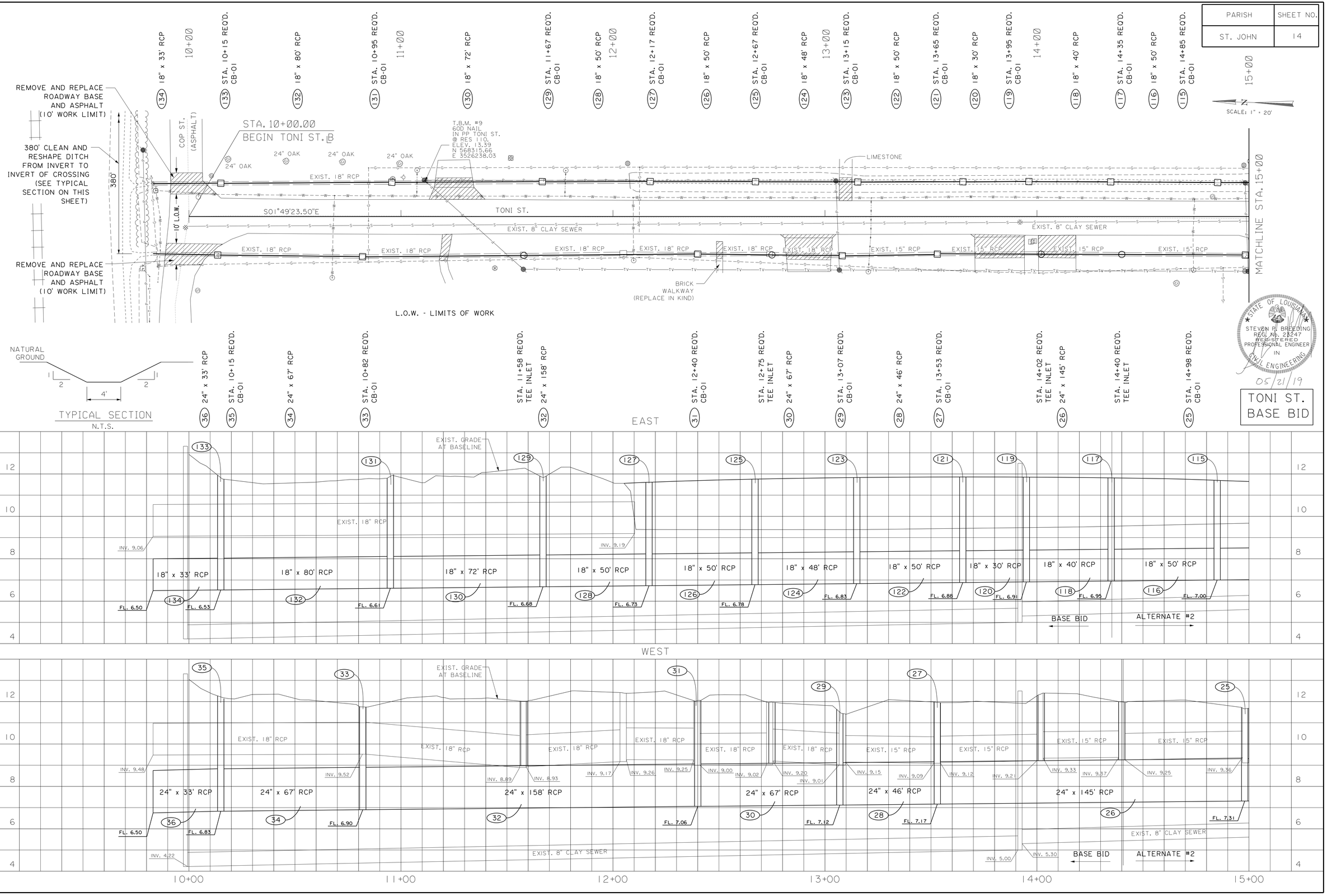

STATE OF LOUISIANA
STEVEN P. BREEDING
REG. No. 23247
REGISTERED PROFESSIONAL ENGINEER IN CIVIL ENGINEERING
05/21/19

TONI ST. BASE BID

SHREAD - KUYRKENDALL & ASSOC. ENGINEERS - SURVEYORS - PLANNERS BATON ROUGE, LOUISIANA

SURVEY | CHECKED A.D.S. | DETAILED | GRAPHICS AREA J.E.P. | FILENAME

S:\CADD\89091\89091.13\PLNPRO-14_TONI.DGN

PARISH	SHEET NO.
ST. JOHN	15

SCALE: 1" = 20'

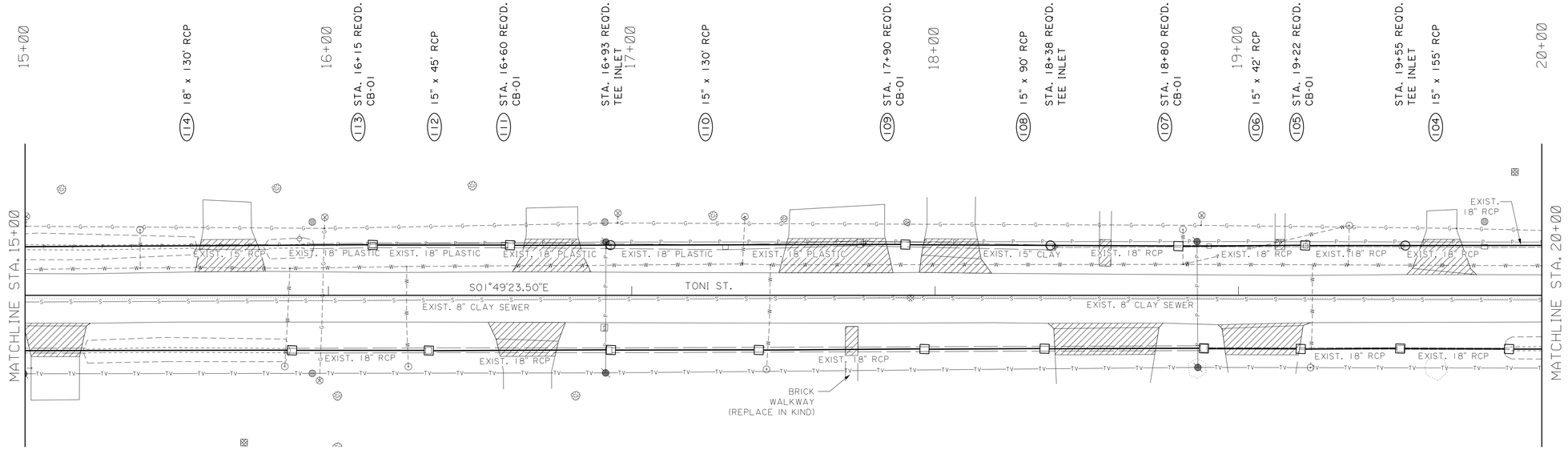

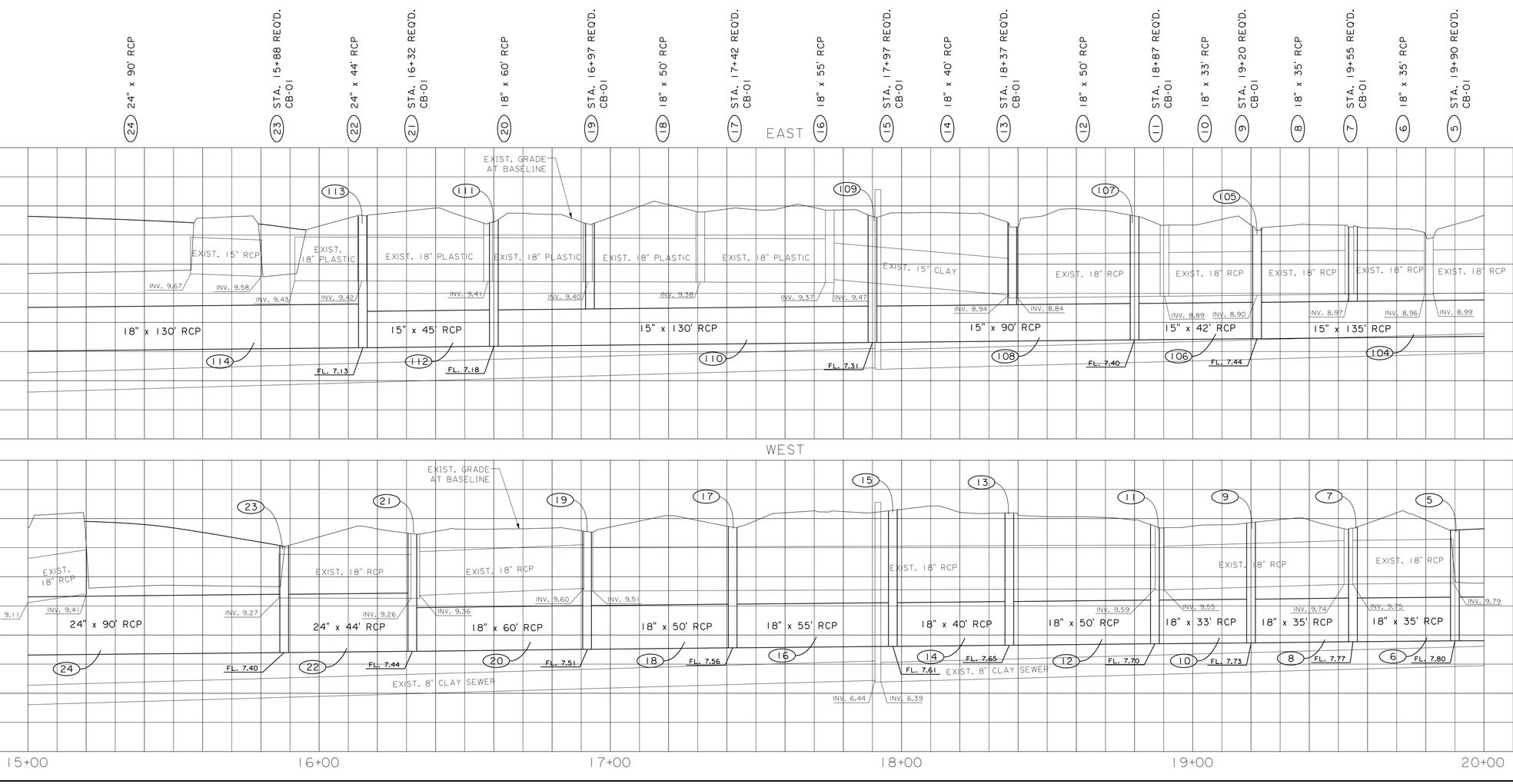

STATE OF LOUISIANA
STEVEN P. BREEDING
REG. No. 28247
REGISTERED PROFESSIONAL ENGINEER
IN
CIVIL ENGINEERING
05/21/19

TONI ST.
BASE BID

SHREAD - KUYKENDALL & ASSOC.
CONSULTING ENGINEERS - PLANNERS
BATON ROUGE, LOUISIANA

SURVEY | CHECKED | DETAILED | A.D.S. | GRAPHICS AREA | J.E.P. | FILENAME

S:\CADD\89091\89091\13-PL\PRO-15_TONI.DGN

PARISH	SHEET NO.
ST. JOHN	16

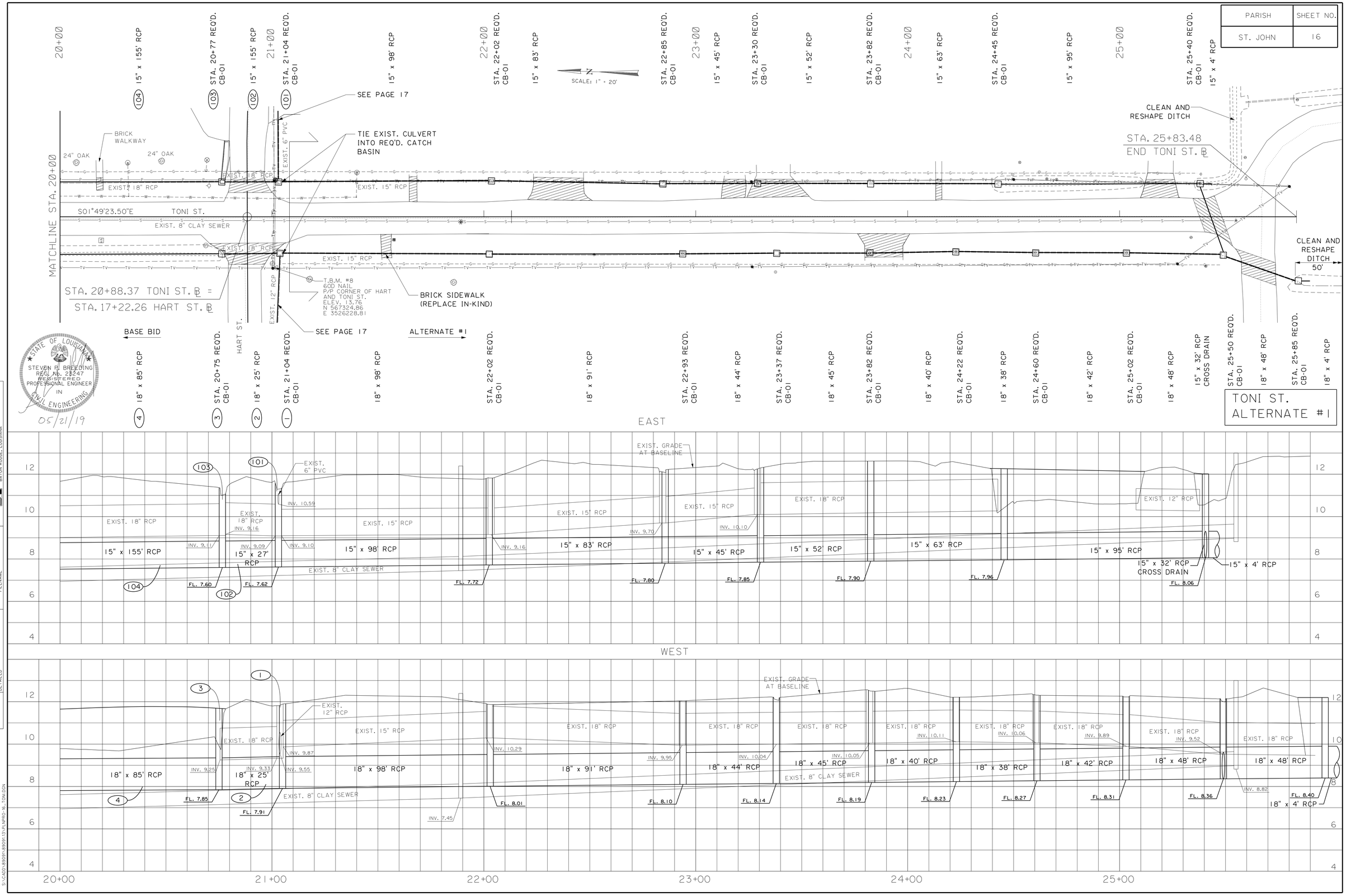

SHREAD • KURKENDALL & ASSOC.
CONSULTING ENGINEERS & PLANNERS
BATON ROUGE, LOUISIANA

SURVEY | CHECKED | DETAILED | A.D.S. | GRAPHICS AREA | FILENAME | J.E.P.

S:\CADD\89091\89091.13\PLN\PRO-16_TONI.DGN

PARISH	SHEET NO.
ST. JOHN	17

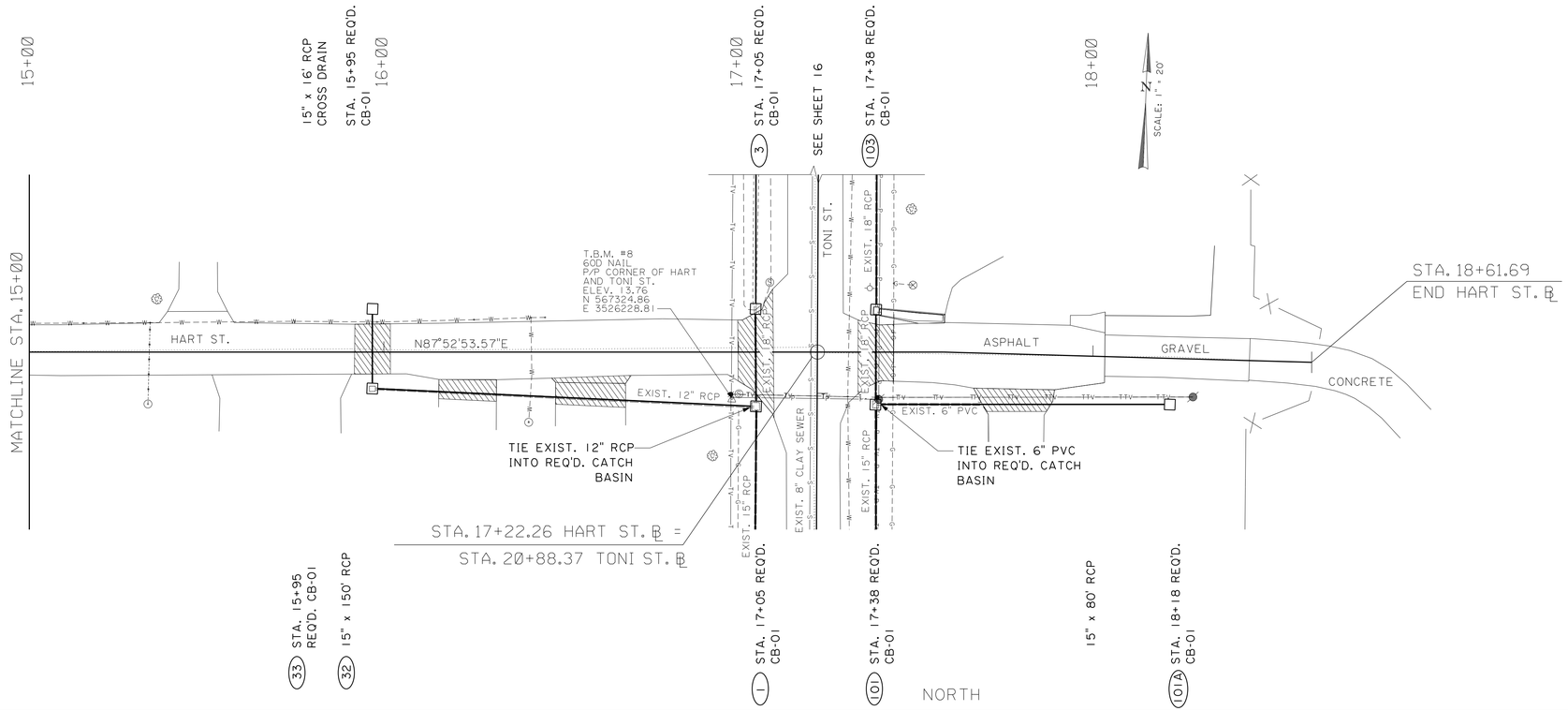

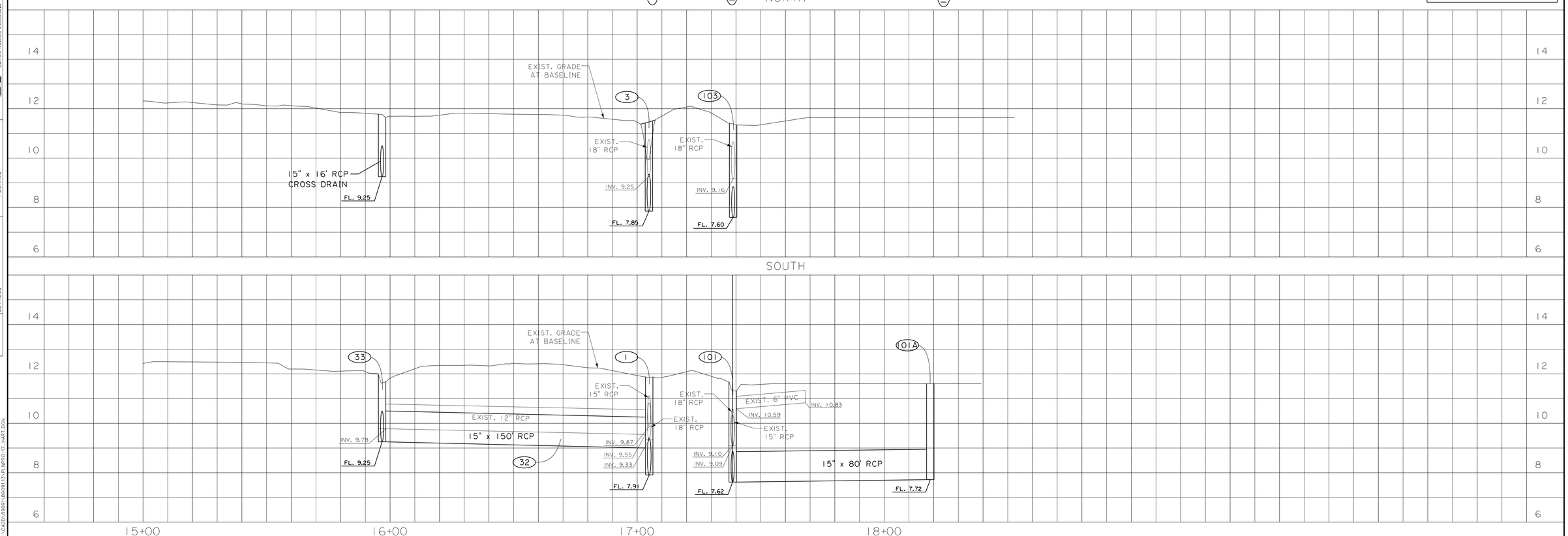

STATE OF LOUISIANA
STEVEN R. BREEDING
REG. No. 28247
REGISTERED PROFESSIONAL ENGINEER IN CIVIL ENGINEERING
05/21/19

HART ST.
ALTERNATE #1

SHREAD - KUYKENDALL & ASSOC.
ENGINEERS - SURVEYORS - PLANNERS
BATON ROUGE, LOUISIANA

SURVEY
CHECKED A.D.S.
DETAILED
GRAPHICS AREA J.E.P.
FILENAME

S:\CADD\89091\89091.13-PL\PRO-17_HART.DGN

PARISH	SHEET NO.
ST. JOHN	18

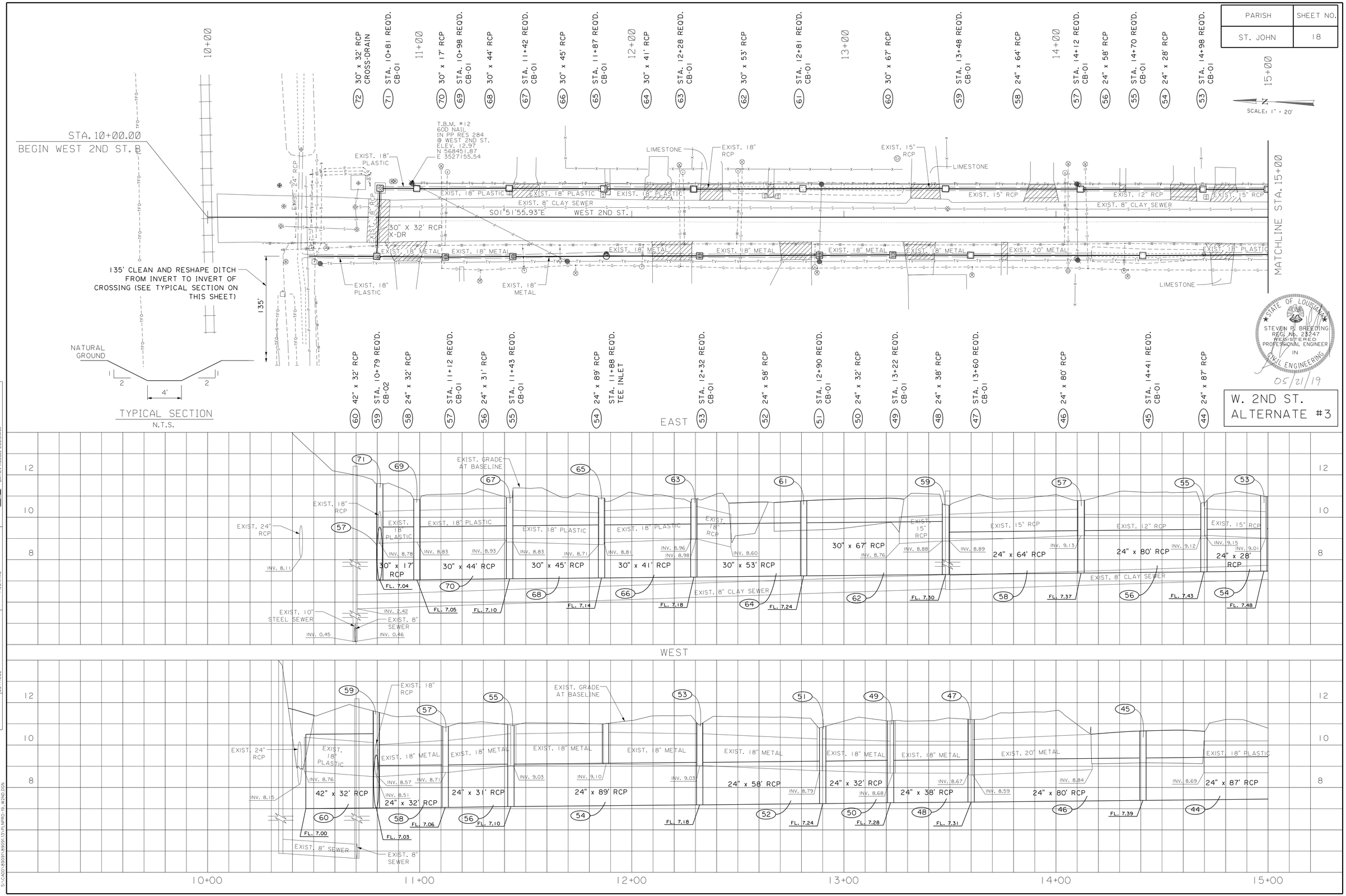

STATE OF LOUISIANA
STEVEN P. BREEDING
REG. NO. 28247
REGISTERED PROFESSIONAL ENGINEER IN CIVIL ENGINEERING
05/21/19

W. 2ND ST. ALTERNATE #3

SHREAD - KUYKENDALL & ASSOC.
CONSULTING ENGINEERS - PLANNERS
BATON ROUGE, LOUISIANA

SURVEY | CHECKED | DETAILED | A.D.S. | GRAPHICS AREA | J.E.P. | FILENAME

S:\CADD\89091\89091\13-PL\PRO-19_W2ND.DGN

PARISH	SHEET NO.
ST. JOHN	19

SCALE: 1" = 20'

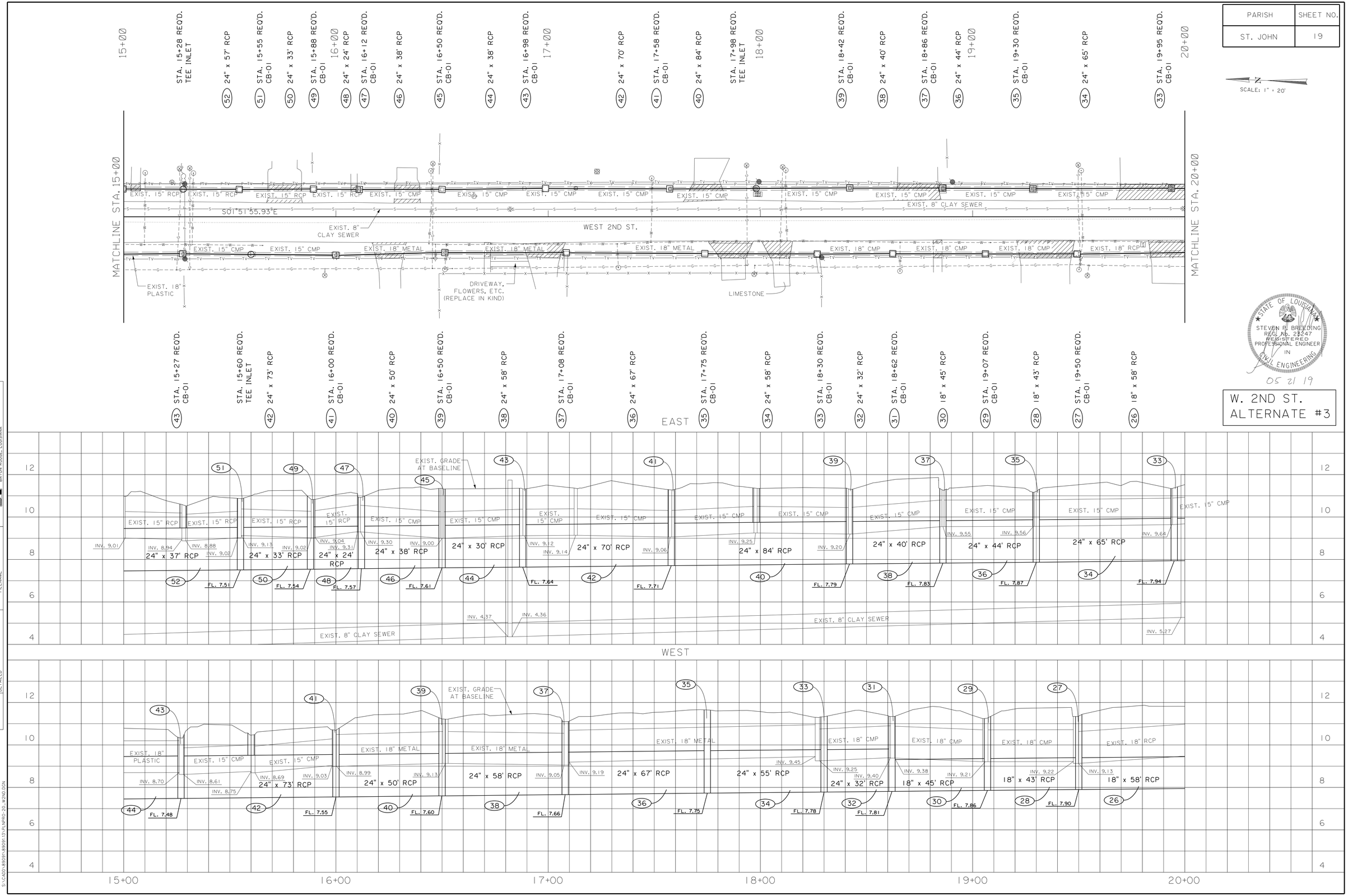

STATE OF LOUISIANA
STEVEN P. BREEDING
REG. No. 23247
REGISTERED PROFESSIONAL ENGINEER IN CIVIL ENGINEERING

05 21 19

W. 2ND ST.
ALTERNATE #3

SHREAD - KUYRKENDALL & ASSOC.
ENGINEERS - SURVEYORS - PLANNERS
BATON ROUGE, LOUISIANA

SURVEY	CHECKED	A.D.S.	GRAPHICS AREA	J.E.P.
	DETAILED		FILENAME	

S:\CADD\89091\89091.13\PLNPRO-20_W2ND.DGN

PARISH	SHEET NO.
ST. JOHN	20

SCALE: 1" = 20'

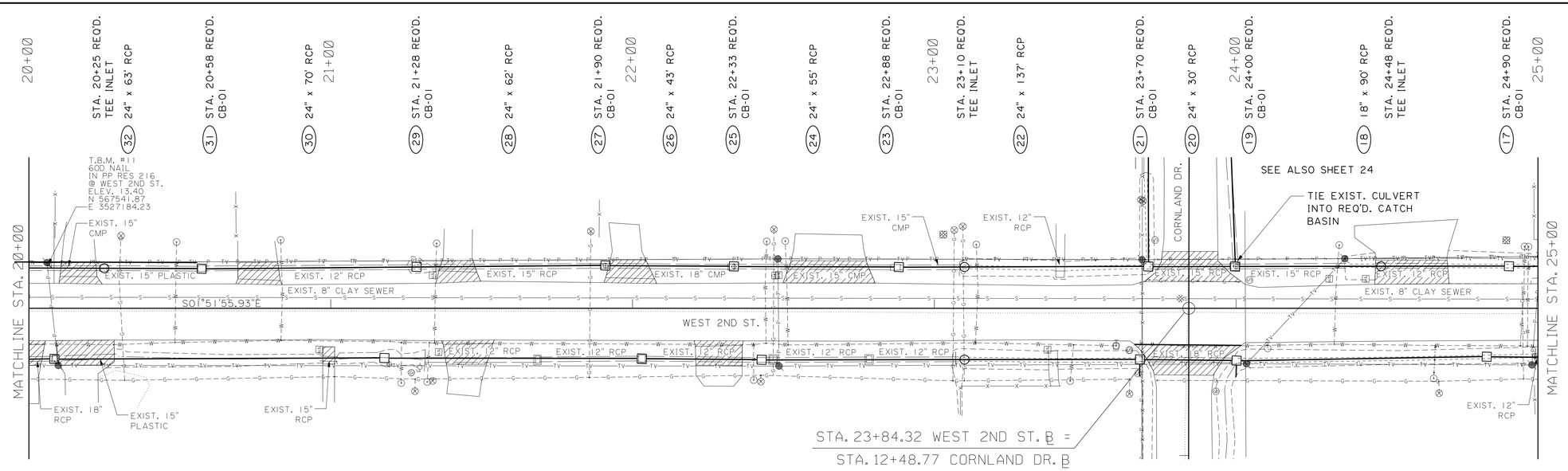

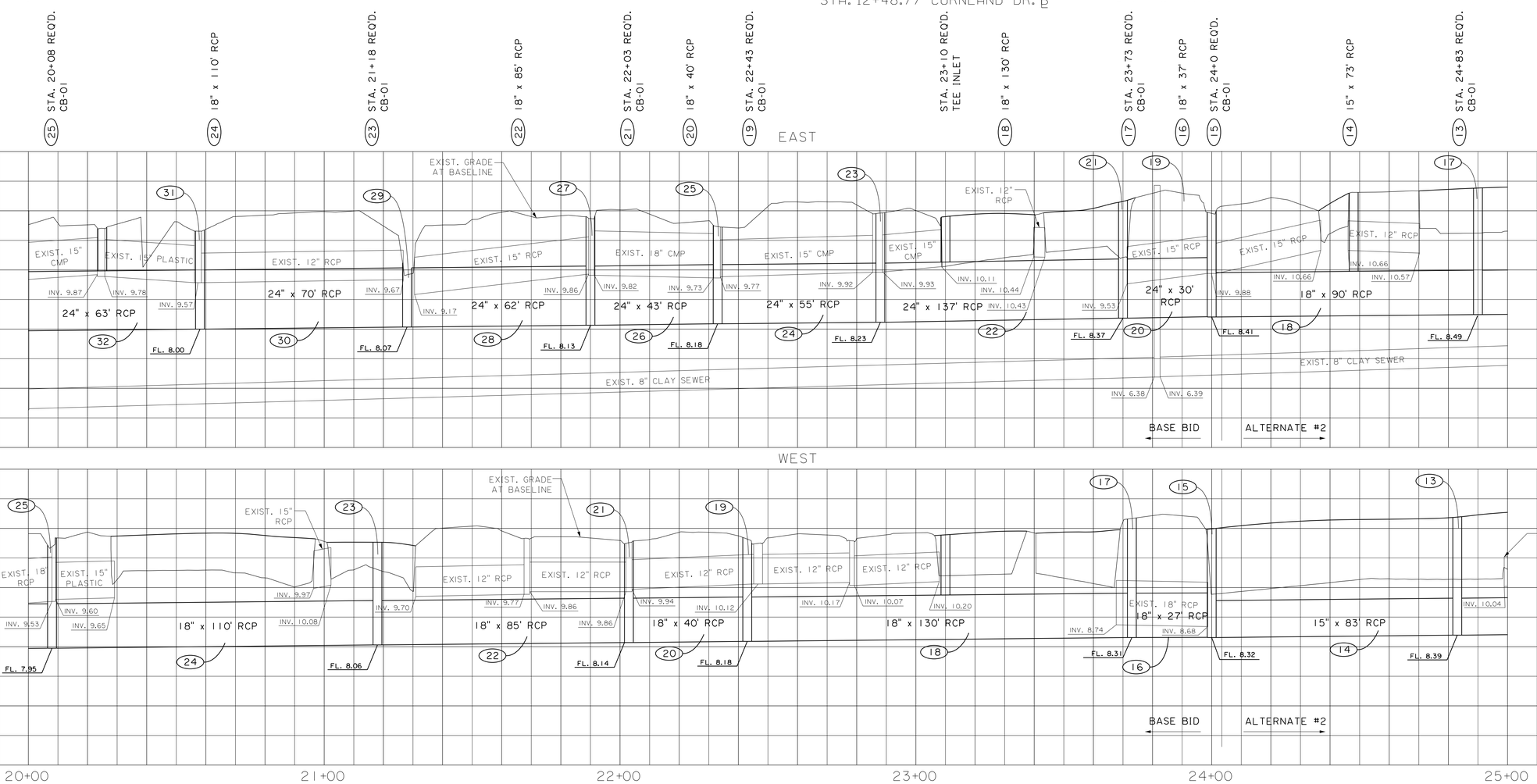

STATE OF LOUISIANA
STEVEN R. BREEDING
REG. No. 28247
REGISTERED PROFESSIONAL ENGINEER IN CIVIL ENGINEERING
05/21/19

W. 2ND ST.
ALTERNATE #3

SHREAD - KUYKENDALL & ASSOC.
CONSULTING ENGINEERS - PLANNERS
BATON ROUGE, LOUISIANA

SURVEY
CHECKED
DETAILED
A.D.S.
GRAPHICS AREA
FILENAME
J.E.P.

S:\CADD\89091\89091.13-PL\PRO-21_W2ND.DGN

PARISH	SHEET NO.
ST. JOHN	21

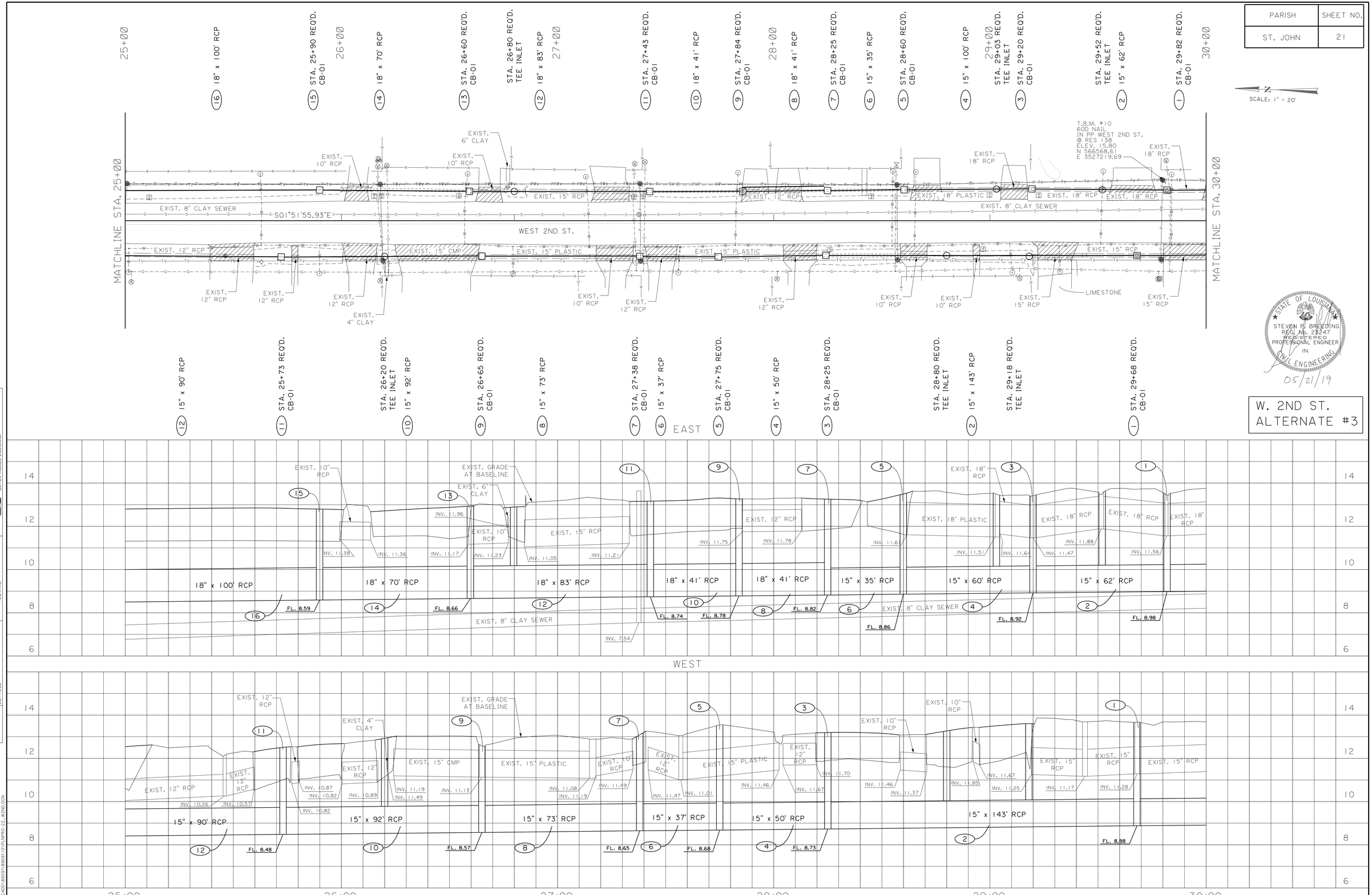

STATE OF LOUISIANA
STEVEN P. BREEDING
REG. No. 23247
REGISTERED PROFESSIONAL ENGINEER
IN
CIVIL ENGINEERING
05/21/19

W. 2ND ST.
ALTERNATE #3

SHREAD - KUYRKENDALL & ASSOC.
ENGINEERS - SURVEYORS - PLANNERS
BATON ROUGE, LOUISIANA

SURVEY
CHECKED A.D.S.
DETAILED
GRAPHICS AREA J.E.P.
FILENAME

S:\CADD\89091\89091.13\PLNPRO-22_W2ND.DGN

PARISH	SHEET NO.
ST. JOHN	22

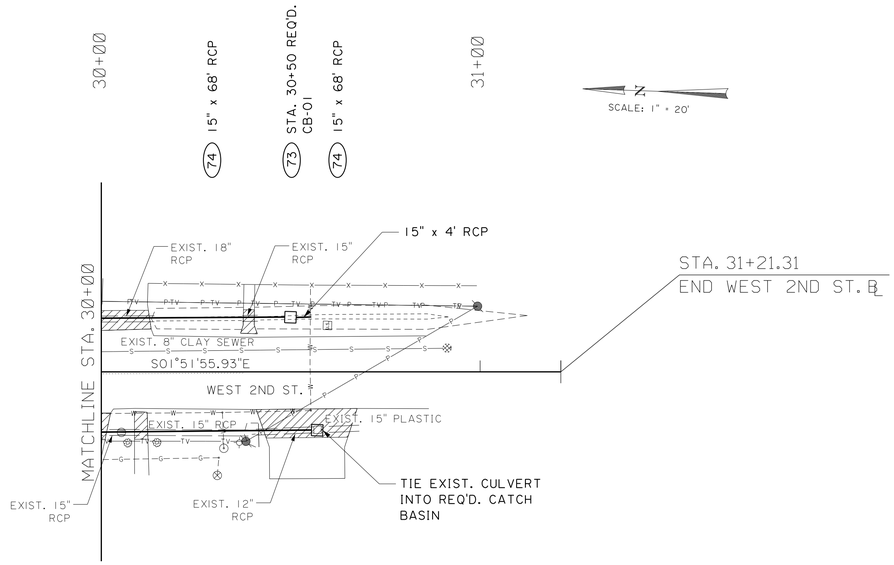

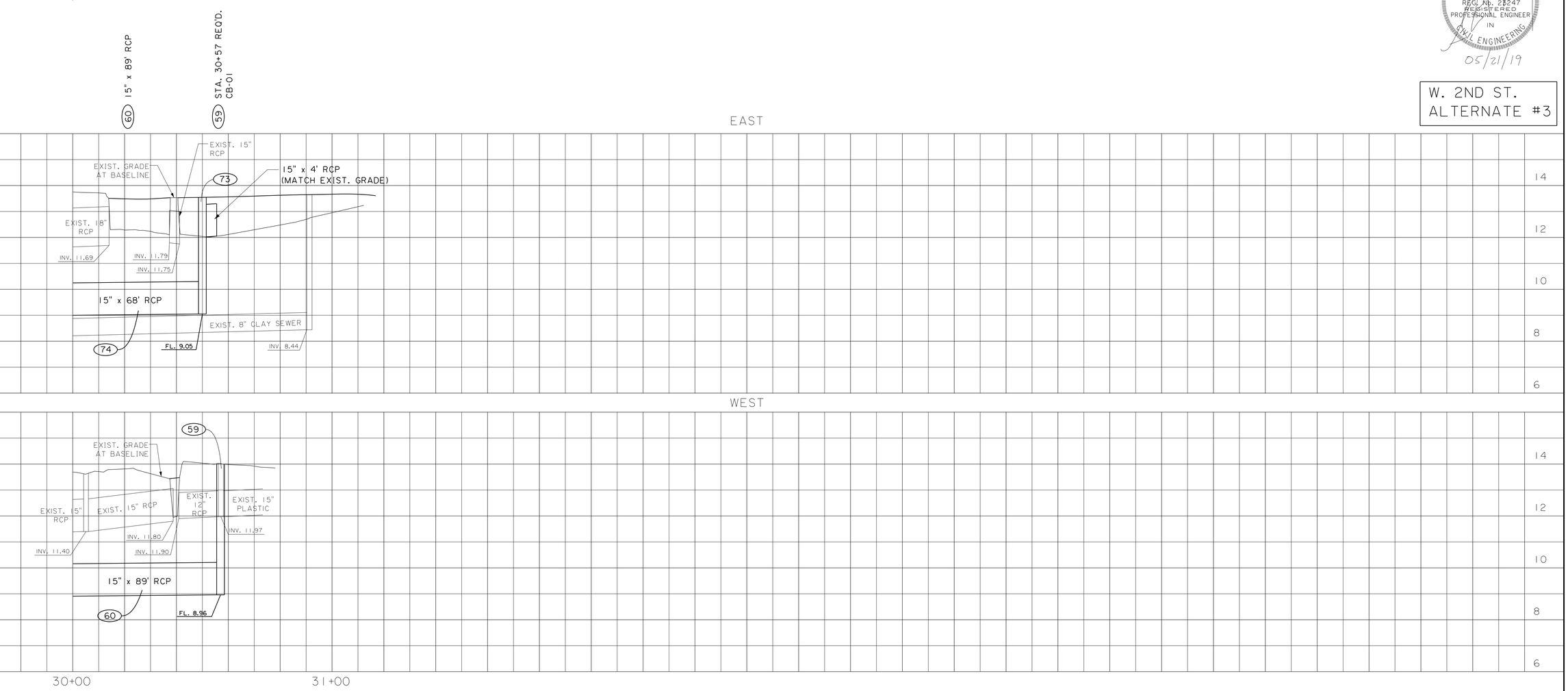

STATE OF LOUISIANA
STEVEN R. BREEDING
REG. No. 28247
REGISTERED PROFESSIONAL ENGINEER IN CIVIL ENGINEERING
05/21/19

W. 2ND ST.
ALTERNATE #3

SHREAD - KUYKENDALL & ASSOC.
CONSULTING ENGINEERS - PLANNERS
BATON ROUGE, LOUISIANA

SURVEY
CHECKED
DETAILED
A.D.S.
GRAPHICS AREA
FILENAME
J.E.P.

S:\CADD\89091\89091\3-PL\PRO-23_W2ND.DGN

PARISH	SHEET NO.
ST. JOHN	23

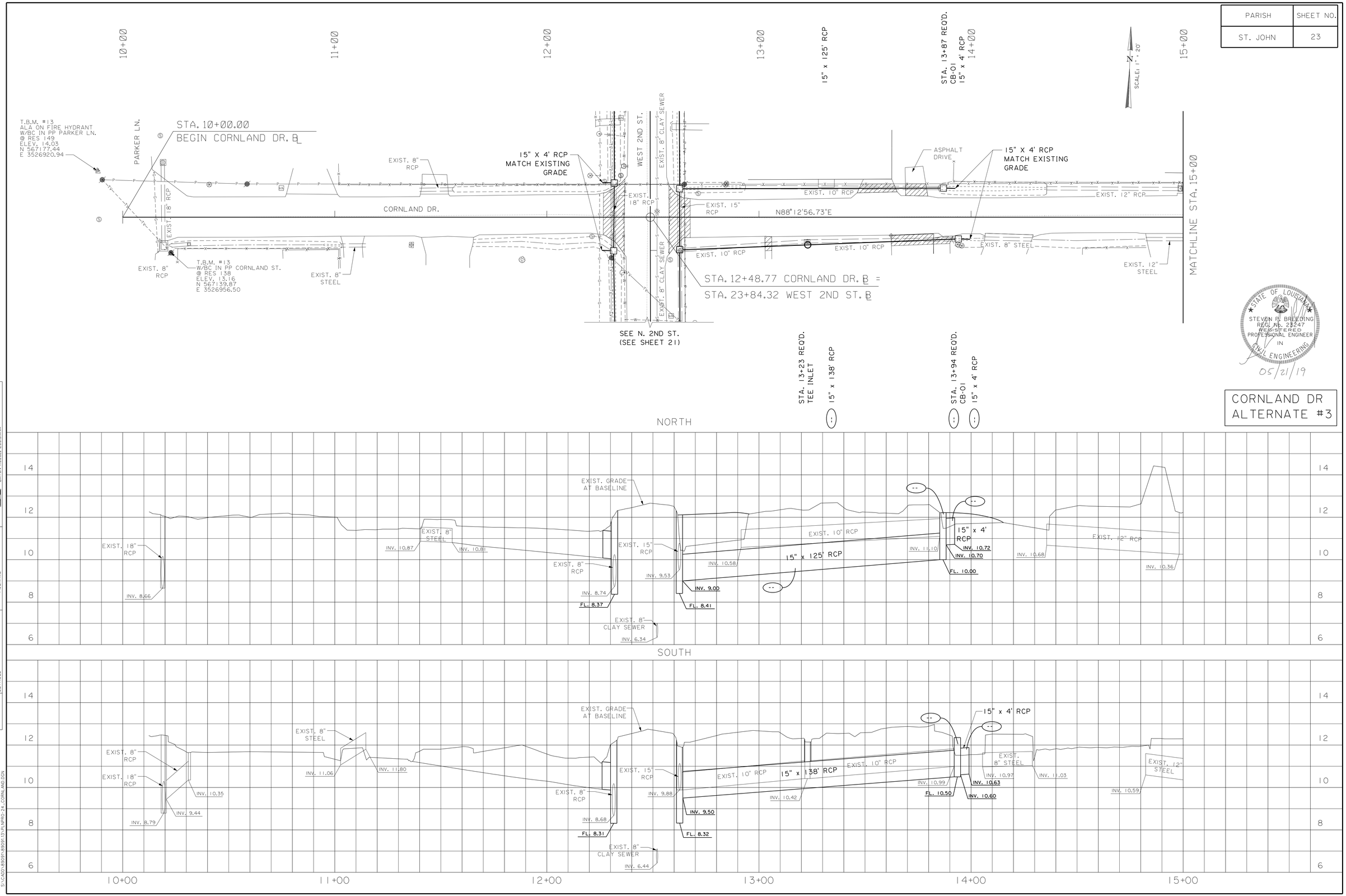

STATE OF LOUISIANA
STEVEN P. BREEDING
REG. No. 28247
REGISTERED
PROFESSIONAL ENGINEER
IN
CIVIL ENGINEERING
05/21/19

CORNLAND DR
ALTERNATE #3

SHREAD - KUPRENDALL & ASSOC.
ENGINEERS - ARCHITECTS - PLANNERS
BATON ROUGE, LOUISIANA

SURVEY
CHECKED A.D.S.
DETAILED
GRAPHICS AREA J.E.P.
FILENAME

S:\CADD\R8091\R8091131-PLNPRO-24_CORNLAND.DGN

PARISH	SHEET NO.
ST. JOHN	24

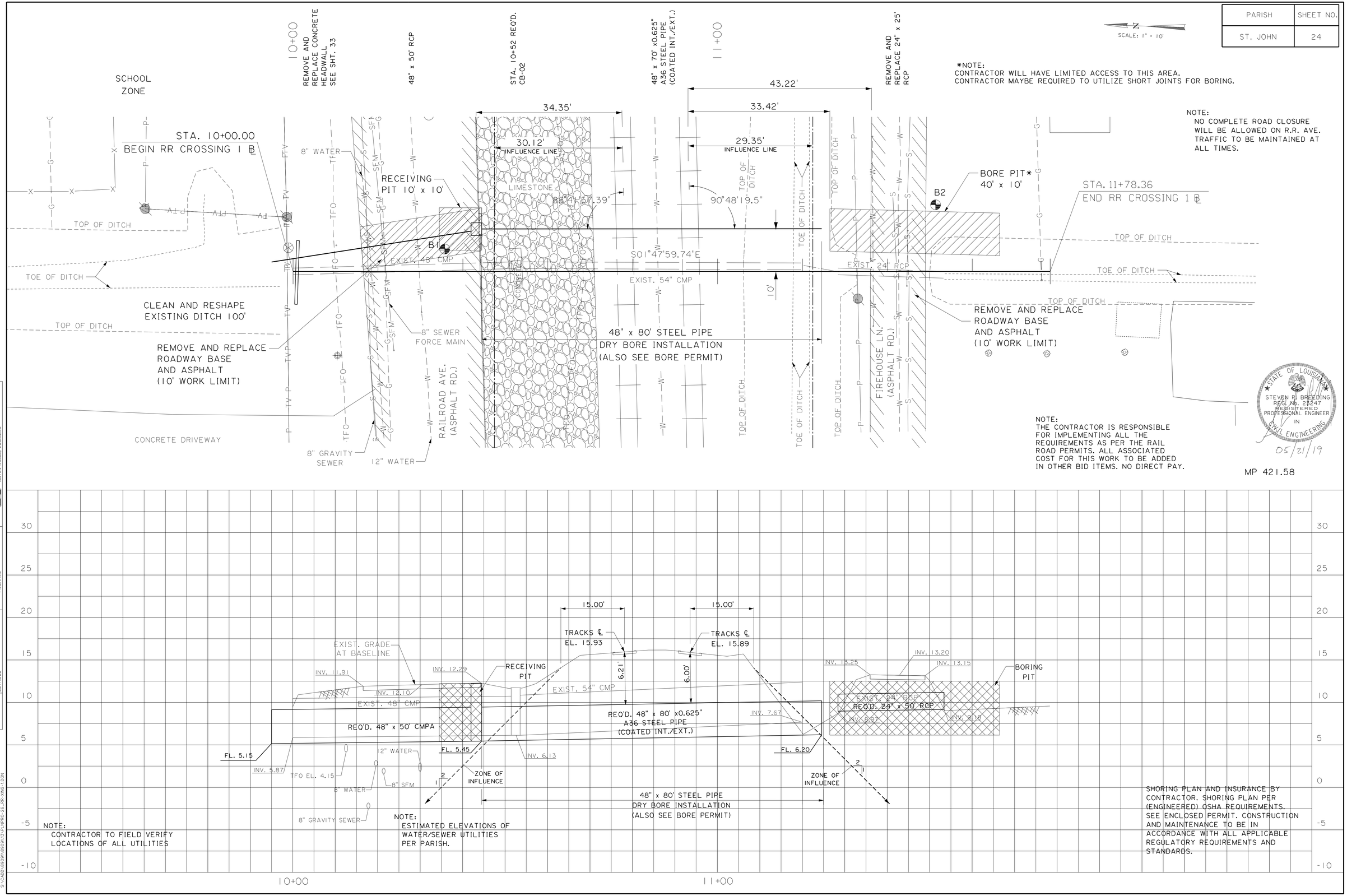

*NOTE:
CONTRACTOR WILL HAVE LIMITED ACCESS TO THIS AREA.
CONTRACTOR MAYBE REQUIRED TO UTILIZE SHORT JOINTS FOR BORING.

NOTE:
NO COMPLETE ROAD CLOSURE WILL BE ALLOWED ON R.R. AVE. TRAFFIC TO BE MAINTAINED AT ALL TIMES.

NOTE:
THE CONTRACTOR IS RESPONSIBLE FOR IMPLEMENTING ALL THE REQUIREMENTS AS PER THE RAIL ROAD PERMITS. ALL ASSOCIATED COST FOR THIS WORK TO BE ADDED IN OTHER BID ITEMS. NO DIRECT PAY.

NOTE:
CONTRACTOR TO FIELD VERIFY LOCATIONS OF ALL UTILITIES

NOTE:
ESTIMATED ELEVATIONS OF WATER/SEWER UTILITIES PER PARISH.

SHORING PLAN AND INSURANCE BY CONTRACTOR. SHORING PLAN PER (ENGINEERED) OSHA REQUIREMENTS. SEE ENCLOSED PERMIT. CONSTRUCTION AND MAINTENANCE TO BE IN ACCORDANCE WITH ALL APPLICABLE REGULATORY REQUIREMENTS AND STANDARDS.

SURVEY
CHECKED A.D.S.
DETAILED
GRAPHICS AREA J.E.P.
FILENAME
SHREAD - KUYRKENDALL & ASSOC. ENGINEERS - SURVEYORS - PLANNERS BATON ROUGE, LOUISIANA
S:\CADD\89091\89091.13\PLNPRO-26_RR-XING-1.DGN

PARISH	SHEET NO.
ST. JOHN	25

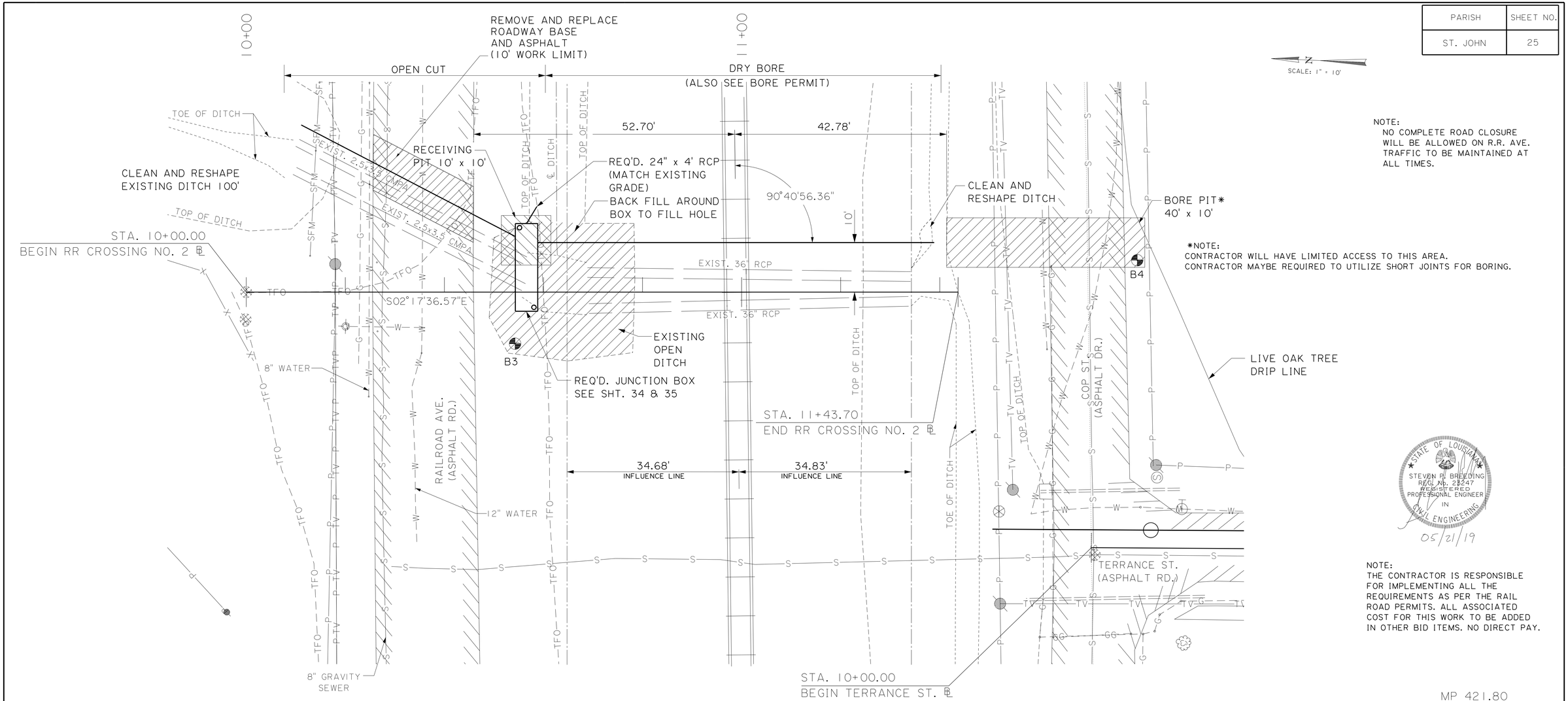

NOTE:
NO COMPLETE ROAD CLOSURE WILL BE ALLOWED ON R.R. AVE. TRAFFIC TO BE MAINTAINED AT ALL TIMES.

*NOTE:
CONTRACTOR WILL HAVE LIMITED ACCESS TO THIS AREA. CONTRACTOR MAYBE REQUIRED TO UTILIZE SHORT JOINTS FOR BORING.

STATE OF LOUISIANA
STEVEN P. BREEDING
REG. No. 23247
REGISTERED PROFESSIONAL ENGINEER IN CIVIL ENGINEERING
05/21/19

NOTE:
THE CONTRACTOR IS RESPONSIBLE FOR IMPLEMENTING ALL THE REQUIREMENTS AS PER THE RAIL ROAD PERMITS. ALL ASSOCIATED COST FOR THIS WORK TO BE ADDED IN OTHER BID ITEMS. NO DIRECT PAY.

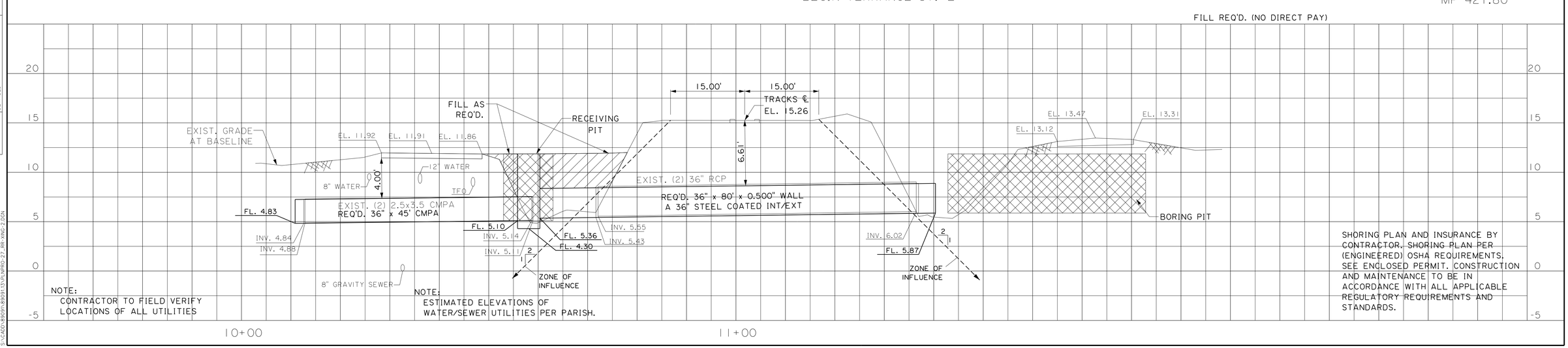

NOTE:
CONTRACTOR TO FIELD VERIFY LOCATIONS OF ALL UTILITIES

NOTE:
ESTIMATED ELEVATIONS OF WATER/SEWER UTILITIES PER PARISH.

SHORING PLAN AND INSURANCE BY CONTRACTOR. SHORING PLAN PER (ENGINEERED) OSHA REQUIREMENTS. SEE ENCLOSED PERMIT. CONSTRUCTION AND MAINTENANCE TO BE IN ACCORDANCE WITH ALL APPLICABLE REGULATORY REQUIREMENTS AND STANDARDS.

SURVEY | CHECKED A.D.S. | DETAILED | GRAPHICS AREA J.E.P. | FILENAME

SHREAD - KUYRKENDALL & ASSOC. ENGINEERS - SURVEYORS - PLANNERS BATON ROUGE, LOUISIANA

S:\CADD\89091\89091.13\PLNPRO-27_RR-XING-2.DGN

PARISH	SHEET NO.
ST. JOHN	26

SCALE: 1" = 10'

NOTE:
NO COMPLETE ROAD CLOSURE WILL BE ALLOWED ON R.R. AVE. TRAFFIC TO BE MAINTAINED AT ALL TIMES.

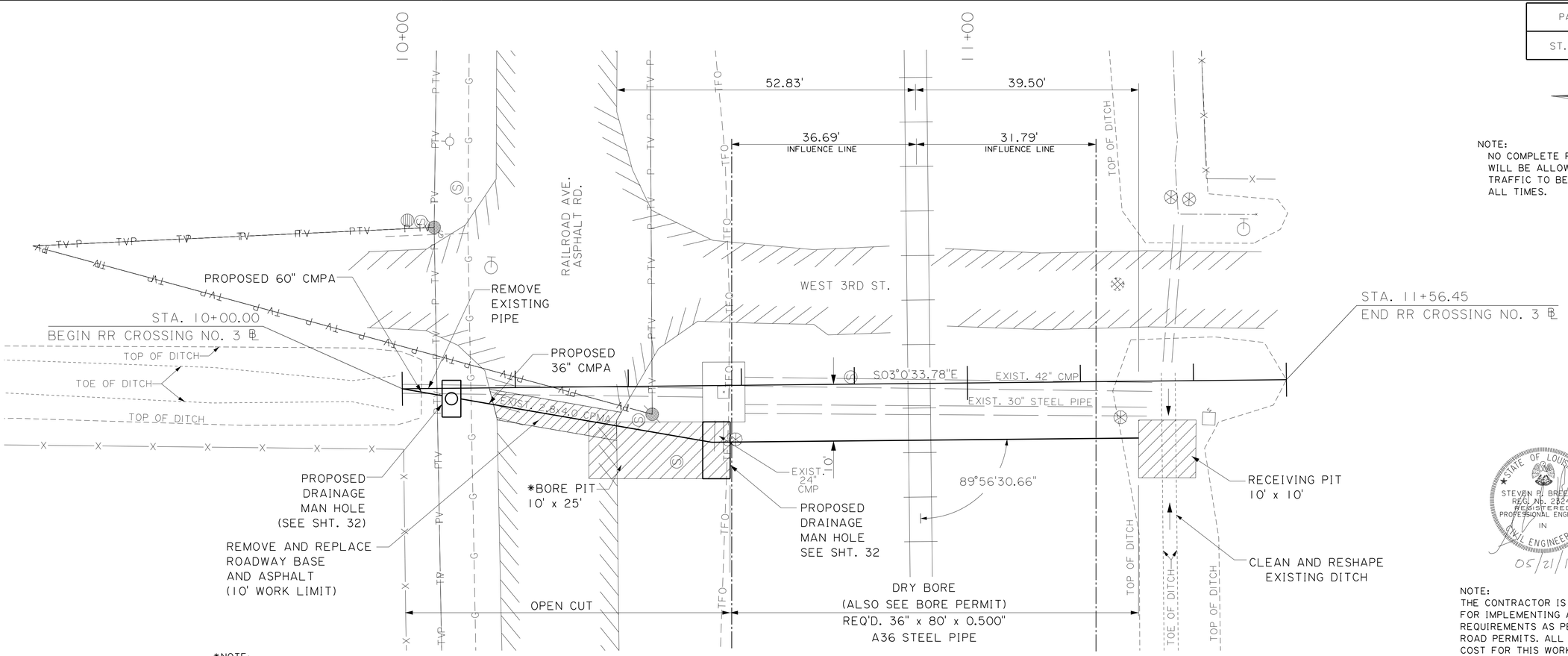

*NOTE:
CONTRACTOR WILL HAVE LIMITED ACCESS TO THIS AREA.
CONTRACTOR MAYBE REQUIRED TO UTILIZE SHORT JOINTS FOR BORING.

STATE OF LOUISIANA
STEVEN R. BREEDING
REG. No. 23247
REGISTERED
PROFESSIONAL ENGINEER
IN
CIVIL ENGINEERING
05/21/19

NOTE:
THE CONTRACTOR IS RESPONSIBLE FOR IMPLEMENTING ALL THE REQUIREMENTS AS PER THE RAIL ROAD PERMITS. ALL ASSOCIATED COST FOR THIS WORK TO BE ADDED IN OTHER BID ITEMS. NO DIRECT PAY.

MP 421.95

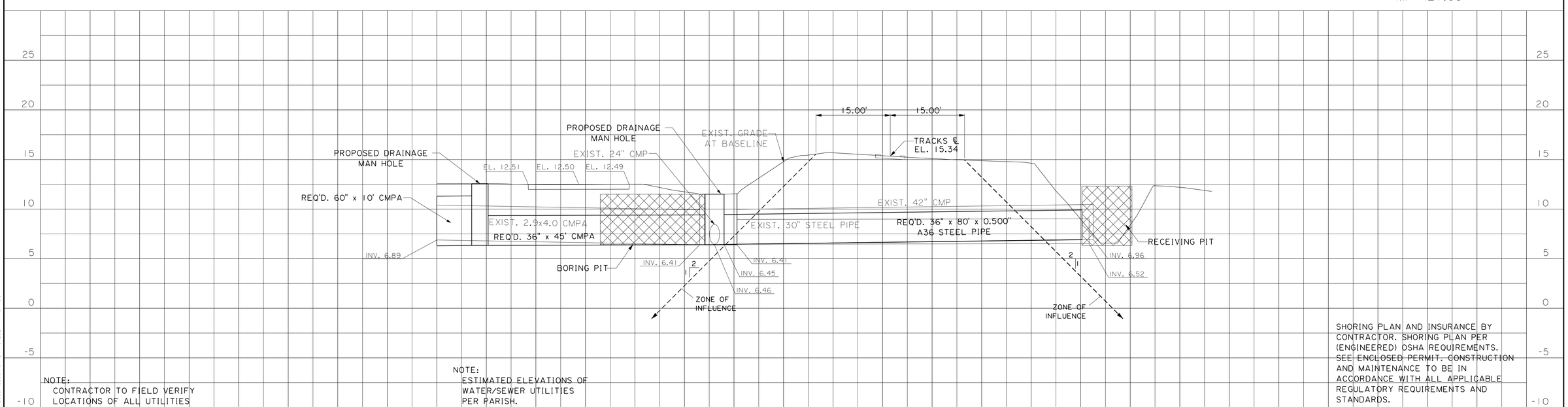

NOTE:
CONTRACTOR TO FIELD VERIFY LOCATIONS OF ALL UTILITIES

NOTE:
ESTIMATED ELEVATIONS OF WATER/SEWER UTILITIES PER PARISH.

SHORING PLAN AND INSURANCE BY CONTRACTOR. SHORING PLAN PER (ENGINEERED) OSHA REQUIREMENTS. SEE ENCLOSED PERMIT. CONSTRUCTION AND MAINTENANCE TO BE IN ACCORDANCE WITH ALL APPLICABLE REGULATORY REQUIREMENTS AND STANDARDS.

SHREAD - KUYKENDALL & ASSOC.
CONSULTING ENGINEERS - PLANNERS
BATON ROUGE, LOUISIANA

SURVEY
CHECKED A.D.S.
DETAILED
GRAPHICS AREA J.E.P.
FILENAME

S:\CADD\89091\89091\13\R\NPRO-28_RR-XING-4.DGN

PARISH	SHEET NO.
ST. JOHN	27

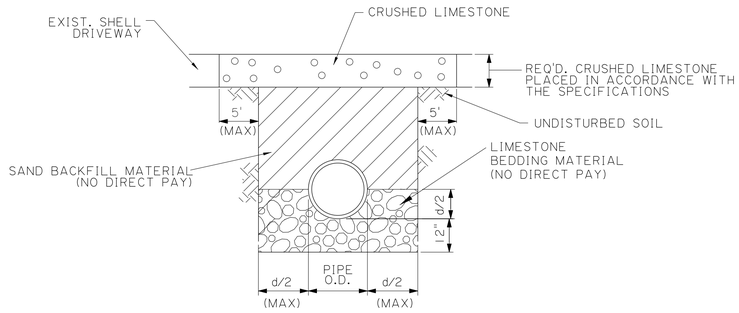

SHELL AND LIMESTONE DRIVE AND TEMPORARY PATCHING DETAIL

N.T.S.

NOTES:

1. CRUSHED LIMESTONE SHALL BE PLACED IN ACCORDANCE WITH THE SPECIFICATIONS.
2. CONTRACTOR WILL BE HELD RESPONSIBLE FOR DAMAGE DONE TO ADJACENT DRIVEWAY OR ROADWAY OTHER THAN WHERE DRIVEWAY OR ROADWAY MUST BE REMOVED IN ORDER TO LAY PIPE.
3. ALL PIPE LAID IN A DAY MUST BE BACKFILLED THE SAME DAY AND DRIVEWAY OR ROADWAY OPENED TO TRAFFIC UNLESS OTHERWISE DIRECTED BY PROJECT ENGINEER.

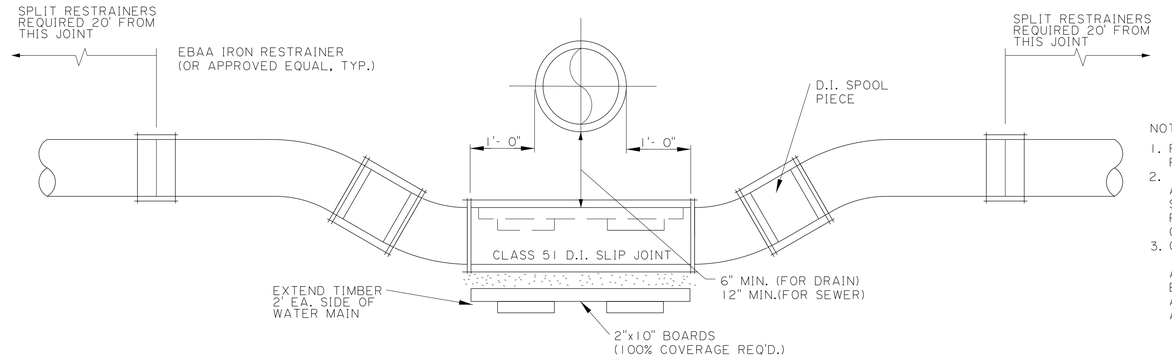

NOTE:

1. FITTINGS INCLUDING RESTRAINERS SHALL BE RATED 350 p.s.i.
2. ALL DUCTILE IRON (D.I.) PIPE AND FITTINGS SHALL BE US PIPE OR APPROVED EQUAL. D.I. PIPES SHALL HAVE FACTORY INSTALLED CEMENT LINING INSIDE AND BE EPOXY COATED
3. ON THE OUTSIDE.

ALL JOINT RESTRAINT PRODUCTS SHALL BE EBAA IRON OR APPROVED EQUAL. NOTE THAT ALL THESE ITEMS SHALL HAVE TO BE RATED AT THE FULL PRESSURE CAPACITY OF THE PIPE.

TYPICAL OFFSET IN WATER MAIN

N.T.S.

NOTE:

ALL GREY CASTINGS FOR MANHOLES, AND CATCH BASINS OF ALL TYPES SHALL CONFORM TO THE REQUIRMENTS OF A.S.T.M. A-48, CLASS 30. AND SHALL BE FURNISHED WITHOUT PAINT (AASHTO#306-891)

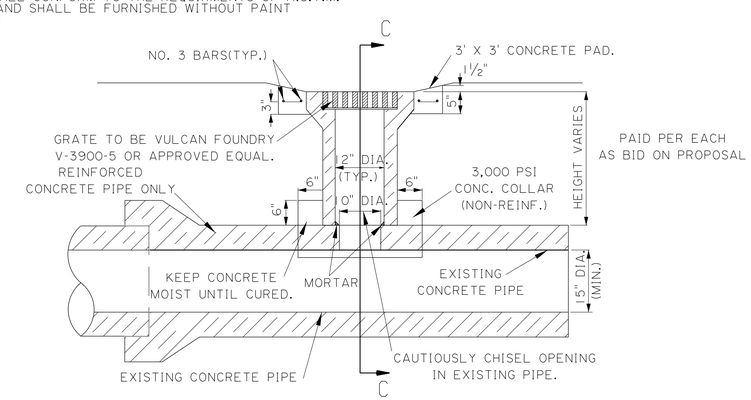

TEE INLET DETAIL

N.T.S.

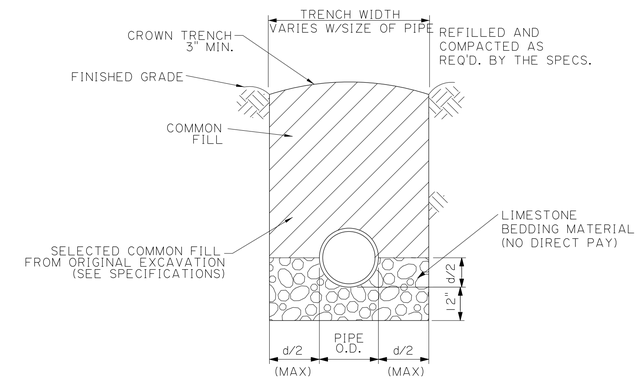

UNIMPROVED SURFACE PIPE BEDDING DETAIL

N.T.S.

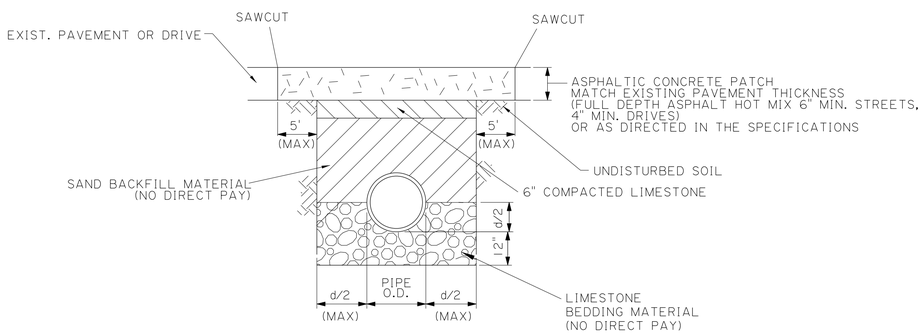

ASPHALTIC CONCRETE PAVEMENT AND DRIVE PATCHING DETAIL

N.T.S.

NOTES:

1. ASPHALTIC CONCRETE SHALL BE PLACED IN LIFTS OR SUCH THICKNESS SO THAT ALL COMPACTION AND SURFACE TOLERANCE REQUIREMENTS OF THE SPECIFICATIONS ARE COMPLIED WITH.
2. CONTRACTOR WILL BE HELD RESPONSIBLE FOR DAMAGE DONE TO EXISTING ROADWAY AND CURBING OTHER THAN WHERE PAVEMENT AND CURB MUST BE REMOVED IN ORDER TO LAY PIPE ON CONSTRUCT CATCH BASINS OR MANHOLES.
3. ALL PIPE LAID IN A DAY MUST BE BACKFILLED THE SAME DAY AND ROADWAY OPENED TO TRAFFIC UNLESS OTHERWISE DIRECTED BY PROJECT ENGINEER.
4. FOR TEMPORARY PATCHING SEE DETAIL THIS SHEET.
5. CONTRACTOR TO MATCH EXISTING ROAD CROSS SLOPE
6. ANY DOWELS ENCOUNTERED IN EXISTING JOINT SHALL BE THOROUGHLY CLEANED OF DUST, DEBRIS AND CONCRETE, (AND SHALL BE STRAIGHTENED), FOR REUSE IN THE NEW CONCRETE PANEL.

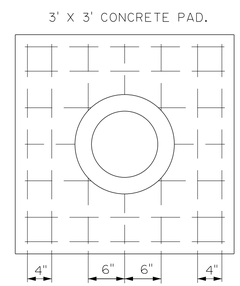

TOP VIEW

7 NO. 3 BARS SPACED AS SHOWN (EACH WAY)

N.T.S.

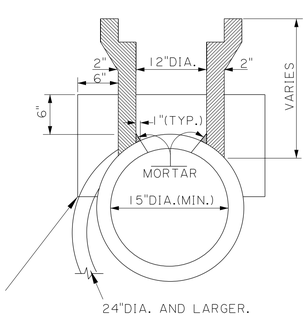

SECTION "C-C"

N.T.S.

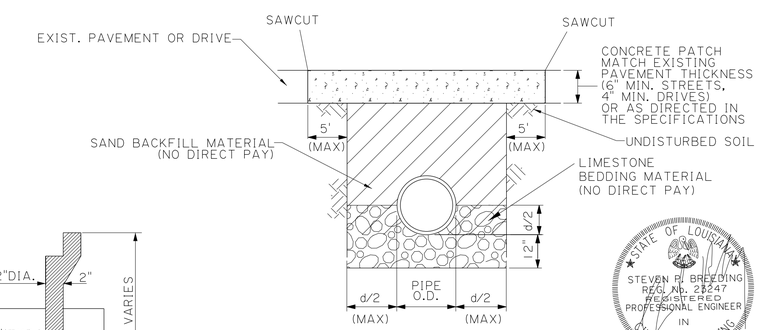

CONCRETE PAVEMENT AND DRIVE PATCHING DETAIL

N.T.S.

STATE OF LOUISIANA
STEVEN R. BREEDING
REG. No. 28247
REGISTERED PROFESSIONAL ENGINEER IN CIVIL ENGINEERING
05/21/19

STREET AND SIDEWALK REPAIR/PIPE BEDDING DETAILS

RESERVE AREA
DRAINAGE IMPROVEMENTS
PHASE II

SHREAD - KUYRKENDALL & ASSOC.
ENGINEERS - SURVEYORS - PLANNERS
BATON ROUGE, LOUISIANA

DATE	DESCRIPTION	BY
	REVISIONS	

DESIGNED	DRAWN	CHECKED	APPROVED
B.D.N.	J.E.P.	R.W.M.	

S:\CADD\89091\89091.13\SHEET 29_ DETAIL.DGN

OPENING		H	E	C	J	D	L	M	S	BARS E							#4 BARS J		BARS O				#4 BARS P		#4BARS H		#4BARS V		BARS M			CONC.	STEEL	OPENING		
Dia. in.	No.	Area sq.ft.	Lgth. ft.-in.	Lgth. ft.-in.	Lgth. ft.-in.	Lgth. ft.-in.	Lgth. ft.-in.	Lgth. ft.-in.	Lgth. ft.-in.	Size	No.	Lgth. ft.-in.	Spc. in.	X ft.-in.	Y in.	Z ft.-in.	No.	Lgth. ft.-in.	Size	No.	Lgth. ft.-in.	Spc. in.	No.	Lgth. ft.-in.	No.	Lgth. ft.-in.	No.	Lgth. in.	Size	No.	Lgth. ft.-in.	CU. YDS.	LBS.	Area sq.ft.	No.	Dia. in.
15	1	1.2	2-8	0-5	0-6	3-1	0-10	5-4	12-3	1-3/4	12	3-7	12.0	0-6	2	2-11	4	5-0	4	13	3-8	12.0	7	11-11	0	0-0	4	8	4	2	11-11	2.48	146	1.2	1	15
15	2	2.5	2-8	0-5	0-6	3-1	0-10	5-4	15-2	1-3/4	15	3-7	12.0	0-6	2	2-11	4	5-0	4	16	3-8	12.0	7	14-10	2	0-11	2	8	4	2	14-10	3.04	180	2.5	2	15
15	3	3.7	2-8	0-5	0-6	3-1	0-10	5-4	18-0	1-3/4	18	3-7	12.0	0-6	2	2-11	4	5-0	4	19	3-8	12.0	7	17-8	4	0-11	3	8	4	2	17-8	3.58	213	3.7	3	15
15	4	4.9	2-8	0-5	0-6	3-1	0-10	5-4	20-11	1-3/4	21	3-7	12.0	0-6	2	2-11	4	5-0	4	22	3-8	12.0	7	20-7	6	0-11	4	8	4	2	20-7	4.14	247	4.9	4	15
15	5	6.1	2-8	0-5	0-6	3-1	0-10	5-4	23-9	1-3/4	24	3-7	12.0	0-6	2	2-11	4	5-0	4	24	3-8	12.0	7	23-5	8	0-11	5	8	4	2	23-5	4.68	277	6.1	5	15
15	6	7.4	2-8	0-5	0-6	3-1	0-10	5-4	26-8	1-3/4	27	3-7	12.0	0-6	2	2-11	4	5-0	4	27	3-8	12.0	7	26-4	10	0-11	6	8	4	2	26-4	5.24	311	7.4	6	15
18	1	1.8	2-11	0-5	0-6	3-3	0-10	5-10	13-7	1-3/4	14	3-10	12.0	0-6	2	3-2	4	5-6	4	14	3-10	12.0	7	13-3	0	0-0	1	8	4	2	13-3	2.87	166	1.8	1	18
18	2	3.5	2-11	0-5	0-6	3-3	0-10	5-10	16-9	1-3/4	17	3-10	12.0	0-6	2	3-2	4	5-6	4	17	3-10	12.0	7	16-5	2	0-11	2	8	4	2	16-5	3.49	203	3.5	2	18
18	3	5.3	2-11	0-5	0-6	3-3	0-10	5-10	19-11	1-3/4	20	3-10	12.0	0-6	2	3-2	4	5-6	4	21	3-10	12.0	7	19-7	4	0-11	3	8	4	2	19-7	4.12	241	5.3	3	18
18	4	7.1	2-11	0-5	0-6	3-3	0-10	5-10	23-1	1-3/4	23	3-10	12.0	0-6	2	3-2	4	5-6	4	24	3-10	12.0	7	22-9	6	0-11	4	8	4	2	22-9	4.75	277	7.1	4	18
18	5	8.8	2-11	0-5	0-6	3-3	0-10	5-10	26-3	1-3/4	26	3-10	12.0	0-6	2	3-2	4	5-6	4	27	3-10	12.0	7	25-11	8	0-11	5	8	4	2	25-11	5.38	313	8.8	5	18
18	6	10.6	2-11	0-5	0-6	3-3	0-10	5-10	29-5	1-3/4	29	3-10	12.0	0-6	2	3-2	4	5-6	4	30	3-10	12.0	7	29-1	10	0-11	6	8	4	2	29-1	6.00	349	10.6	6	18
24	1	3.1	3-6	0-6	0-6	3-6	0-10	7-0	16-6	1-3/4	16	4-6	12.0	0-7	2	3-9	4	6-8	4	17	4-2	12.0	7	16-2	0	0-0	2	8	4	2	16-2	3.80	211	3.1	1	24
24	2	6.3	3-6	0-6	0-6	3-6	0-10	7-0	20-3	1-3/4	19	4-6	12.0	0-7	2	3-9	4	6-8	4	21	4-2	12.0	7	19-11	2	0-11	4	8	4	2	19-11	4.60	256	6.3	2	24
24	3	9.4	3-6	0-6	0-6	3-6	0-10	7-0	24-0	1-3/4	22	4-6	12.0	0-7	2	3-9	4	6-8	4	25	4-2	12.0	7	23-8	4	0-11	6	8	4	2	23-8	5.39	301	9.4	3	24
24	4	12.6	3-6	0-6	0-6	3-6	0-10	7-0	27-9	1-3/4	25	4-6	12.0	0-7	2	3-9	4	6-8	4	28	4-2	12.0	7	27-5	6	0-11	8	8	4	2	27-5	6.19	343	12.6	4	24
24	5	15.7	3-6	0-6	0-6	3-6	0-10	7-0	31-6	1-3/4	28	4-6	12.0	0-7	2	3-9	4	6-8	4	32	4-2	12.0	7	31-2	8	0-11	10	8	4	2	31-2	6.98	388	15.7	5	24
24	6	18.8	3-6	0-6	0-6	3-6	0-10	7-0	35-3	1-3/4	31	4-6	12.0	0-7	2	3-9	4	6-8	4	36	4-2	12.0	7	34-11	10	0-11	12	8	4	2	34-11	7.78	433	18.8	6	24
30	1	4.9	4-1	0-7	0-6	3-9	0-10	8-2	19-5	1-3/4	20	5-2	10.5	0-8	2	4-4	6	7-10	4	20	4-6	12.0	8	19-1	0	0-0	2	8	4	2	19-1	4.86	289	4.9	1	30
30	2	9.8	4-1	0-7	0-6	3-9	0-10	8-2	23-9	1-3/4	23	5-2	10.5	0-8	2	4-4	6	7-10	4	24	4-6	12.0	8	23-5	3	0-11	4	8	4	2	23-5	5.83	343	9.8	2	30
30	3	14.7	4-1	0-7	0-6	3-9	0-10	8-2	28-1	1-3/4	26	5-2	10.5	0-8	2	4-4	6	7-10	4	29	4-6	12.0	8	27-9	6	0-11	6	8	4	2	27-9	6.81	400	14.7	3	30
30	4	19.6	4-1	0-7	0-6	3-9	0-10	8-2	32-5	1-3/4	29	5-2	10.5	0-8	2	4-4	6	7-10	4	33	4-6	12.0	8	32-1	9	0-11	8	8	4	2	32-1	7.78	454	19.6	4	30
30	5	24.5	4-1	0-7	0-6	3-9	0-10	8-2	36-9	1-3/4	32	5-2	10.5	0-8	2	4-4	6	7-10	4	37	4-6	12.0	8	36-5	12	0-11	10	8	4	2	36-5	8.76	508	24.5	5	30
30	6	29.4	4-1	0-7	0-6	3-9	0-10	8-2	41-1	1-3/4	35	5-2	10.5	0-8	2	4-4	6	7-10	4	42	4-6	12.0	8	40-9	15	0-11	12	8	4	2	40-9	9.74	565	29.4	6	30
36	1	7.1	4-8	0-8	0-6	4-1	0-10	9-4	22-4	1-3/4	30	5-10	8.0	0-9	2	4-11	8	9-0	4	23	4-11	12.0	8	22-0	0	0-0	3	8	4	2	22-0	6.08	389	7.1	1	36
36	2	14.1	4-8	0-8	0-6	4-1	0-10	9-4	27-3	1-3/4	33	5-10	8.0	0-9	2	4-11	8	9-0	4	28	4-11	12.0	8	26-11	4	0-11	6	8	4	2	26-11	7.26	453	14.1	2	36
36	3	21.2	4-8	0-8	0-6	4-1	0-10	9-4	32-2	1-3/4	36	5-10	8.0	0-9	2	4-11	8	9-0	4	33	4-11	12.0	8	31-10	8	0-11	9	8	4	2	31-10	8.45	518	21.2	3	36
36	4	28.3	4-8	0-8	0-6	4-1	0-10	9-4	37-1	1-3/4	39	5-10	8.0	0-9	2	4-11	8	9-0	4	38	4-11	12.0	8	36-9	12	0-11	12	8	4	2	36-9	9.63	583	28.3	4	36
36	5	35.3	4-8	0-8	0-6	4-1	0-10	9-4	42-0	1-3/4	42	5-10	8.0	0-9	2	4-11	8	9-0	4	43	4-11	12.0	8	41-8	16	0-11	15	8	4	2	41-8	10.82	648	35.3	5	36
36	6	42.4	4-8	0-8	0-6	4-1	0-10	9-4	46-11	1-3/4	45	5-10	8.0	0-9	2	4-11	8	9-0	4	48	4-11	12.0	8	46-7	20	0-11	18	8	4	2	46-7	12.04	712	42.4	6	36
42	1	9.6	5-3	0-9	0-8	4-2	1-0	10-6	25-3	1-5/4	28	6-10	9.5	1-0	2	5-8	8	10-2	4	26	5-3	12.0	9	24-11	0	0-0	4	8	4	2	24-11	8.84	458	9.6	1	42
42	2	19.2	5-3	0-9	0-8	4-2	1-0	10-6	30-11	1-5/4	31	6-10	9.5	1-0	2	5-8	8	10-2	4	32	5-3	12.0	9	30-7	4	1-1	8	8	4	2	30-7	10.59	539	19.2	2	42
42	3	28.8	5-3	0-9	0-8	4-2	1-0	10-6	36-7	1-5/4	34	6-10	9.5	1-0	2	5-8	8	10-2	4	37	5-3	12.0	9	36-3	8	1-1	12	8	4	2	36-3	12.27	617	28.8	3	42
42	4	38.5	5-3	0-9	0-8	4-2	1-0	10-6	42-3	1-5/4	37	6-10	9.5	1-0	2	5-8	8	10-2	4	43	5-3	12.0	9	41-11	12	1-1	16	8	4	2	41-11	13.99	698	38.5	4	42
42	5	48.1	5-3	0-9	0-8	4-2	1-0	10-6	47-11	1-5/4	40	6-10	9.5	1-0	2	5-8	8	10-2	4	49	5-3	12.0	9	47-7	16	1-1	20	8	4	2	47-7	15.70	779	48.1	5	42
42	6	57.7	5-3	0-9	0-8	4-2	1-0	10-6	53-7	1-5/4	43	6-10	9.5	1-0	2	5-8	8	10-2	4	54	5-3	12.0	9	53-3	20	1-1	24	8	4	2	53-3	17.41	856	57.7	6	42
48	1	12.6	5-10	0-10	0-8	4-6	1-0	11-8	28-2	1-7/4	38	7-6	7.5	1-1	2	6-3	10	11-4	4	30	5-8	11.5	9	27-10	0	0-0	4	8	4	2	27-10	10.64	586	12.6	1	48
48	2	25.1	5-10	0-10	0-8	4-6	1-0	11-8	34-7	1-7/4	41	7-6	7.5	1-1	2	6-3	10	11-4	4	37	5-8	11.5	9	34-3	5	1-3	8	8	4	2	34-3	12.72	680	25.1	2	48
48	3	37.7	5-10	0-10	0-8	4-6	1-0	11-8	41-0	1-7/4	44	7-6	7.5	1-1	2	6-3	10	11-4	4	43	5-8	11.5	9	40-8	10	1-3	12	8	4	2	40-8	14.80	771	37.7	3	48
48	4	50.2	5-10	0-10	0-8	4-6	1-0	11-8	47-5	1-7/4	47	7-6	7.5	1-1	2	6-3	10	11-4	4	50	5-8	11.5	9	47-1	15	1-3	16	8	4	2	47-1	16.87	866	50.2	4	48
48	5	62.8	5-10	0-10	0-8	4-6	1-0	11-8	53-10	1-7/4	50	7-6	7.5	1-1	2	6-3	10	11-4	4	57	5-8	11.5	9	53-6	20	1-3	20	8	4	2	53-6	18.95	961	62.8	5	48
48	6	75.4	5-10	0-10	0-8	4-6	1-0	11-8	60-3	1-7/4	53	7-6	7.5	1-1	2	6-3	10	11-4	4	64	5-8	11.5	9	59-11	25	1-3	24	8	4	2	59-11	21.02	1055	75.4	6	48
54	1	15.9	6-5	1-0	0-8	4-9	1-0	12-10	31-1	1-9/4	52	8-3	6.0	1-3	2	6-10	10	12-6	4	40	6-1	9.5	10	30-9	0	0-0	4	8	4	2	30-9	12.61	781	15.9	1	54
54	2	31.8	6-5	1-0	0-8	4-9	1-0	12-10	38-3	1-9/4	56	8-3	6.0	1-3	2	6-10	10	12-6	4	49	6-1	9.5	10	37-11	5	1-5	10	8	4	2	37-11	15.07	904	31.8	2	54
54	3	47.7	6-5	1-0	0-8	4-9	1-0	12-10	45-5	1-9/4	60	8-3	6.0	1-3	2	6-10	10	12-6	4	58	6-1	9.5	10	45-1	10	1-5	15	8	4	2	45-1	17.54	1027	47.7	3	54
54	4	63.6	6-5	1-0	0-8	4-9	1-0	12-10	52-7	1-9/4	64	8-3	6.0	1-3	2	6-10	10	12-6	4	67	6-1	9.5	10	52-3	15	1-5	20	8	4	2	52-3	20.01	1150	63.6	4	54
54	5	79.5	6-5	1-0	0-8	4-9	1-0	12-10	59-9	1-9/4	68	8-3	6.0	1-3	2	6-10	10	12-6	4	76	6-1	9.5	10	59-5	20	1-5	25	8	4	2	59-5	22.48	1273	79.5	5	54
54	6	95.4	6-5	1-0	0-8	4-9	1-0	12-10	66-11	1-9/4	72	8-3	6.0	1-3	2	6-10	10	12-6	4	85	6-1	9.5	10	66-7	25	1-5	30	8	4	2	66-7	24.95	1396	95.4	6	54

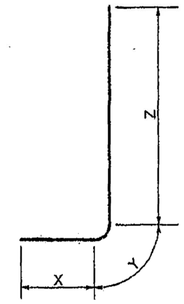

BARS E

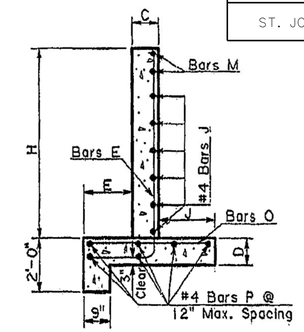

SECTION A-A

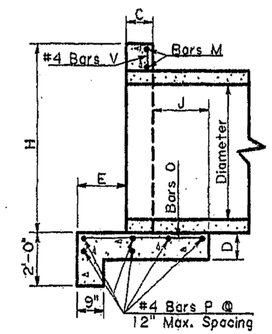

SECTION B-B

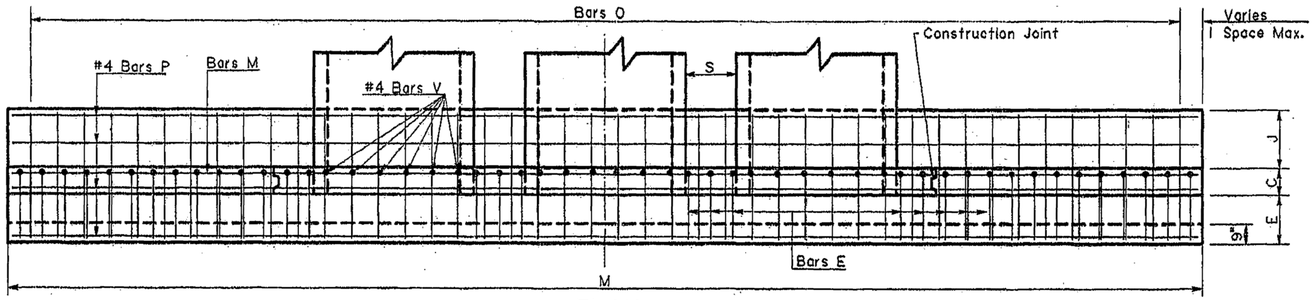

PLAN

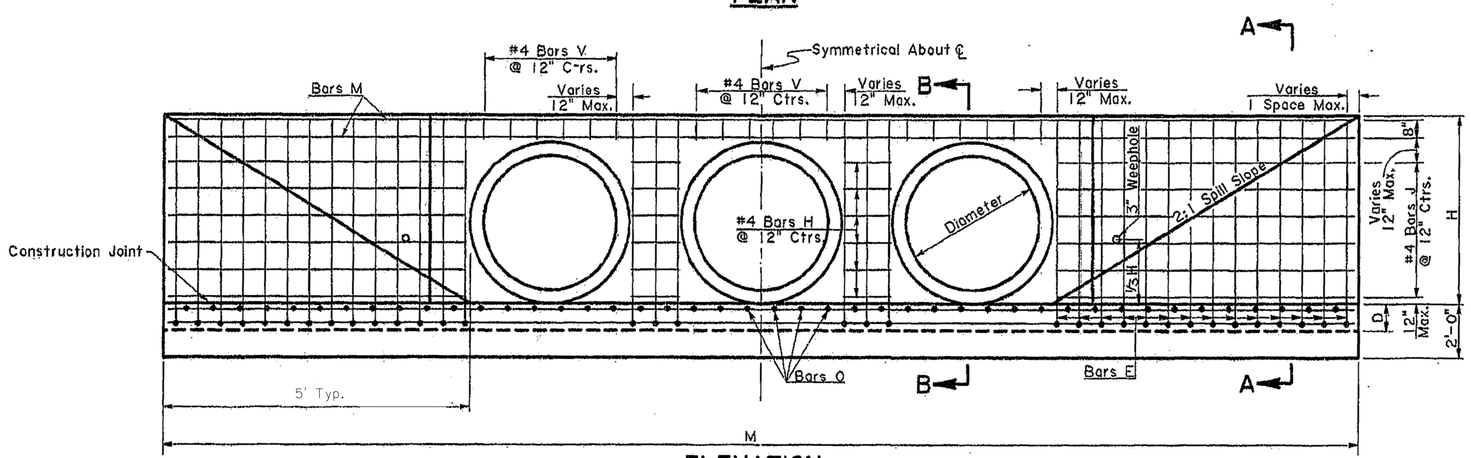

ELEVATION

GENERAL NOTES:

DESIGN: METHOD- HEADWALLS ARE DESIGNED AS RETAINING WALLS ACCORDING TO CURRENT AASHTO WORKING STRESS PROCEDURES. WALLS ARE DESIGNED FOR A LATERAL EARTH PRESSURE OF 40 PSF WITH 2.0 FEET OF SURCHARGE. OVERTURNING- A MINIMUM SAFETY FACTOR OF 2.0 IS PROVIDED AGAINST OVERTURNING. THE RESULTANT OF LOADS WITHIN THE MIDDLE THIRD OF THE FOOTING. SLIDING- A MINIMUM SAFETY FACTOR OF 1.5 IS PROVIDED AGAINST SLIDING. THE COEFFICIENT OF FRICTION BETWEEN THE FOOTING AND SOIL IS 0.5. FOUNDATION- THE DESIGN SOIL BEARING PRESSURE IS 1800 PSF. WHEN STRENGTH OF THE SOIL AT THE SITE IS LESS THAN 1800 PSF, BEDDING MATERIAL SHALL BE ADDED UNDER THE FOOTING AS DIRECTED.

MATERIALS: CONCRETE- ALL CONCRETE SHALL BE CLASS A. ALL EXPOSED EDGES SHALL BE ¾" CHAMFERED. REINFORCING STEEL- REINFORCEMENT SHALL BE GRADE 60. BAR SPACING DIMENSIONS ARE TO BAR CENTERS. STEEL REQUIRED FOR LAP SPLICES NOT DETAILED SHALL NOT BE MEASURED FOR PAYMENT. REINFORCING STEEL SHALL HAVE A 2" COVER UNLESS OTHERWISE SPECIFIED. STEEL AND CONCRETE QUANTITIES SHOWN IN TABLE ARE FOR ONE HEADWALL.

A 1'-6" SQUARE OF GEOTEXTILE FABRIC (SEE SECTION 1019 OF THE LA DOTD STANDARD SPECIFICATIONS) SHALL BE PLACED IN CONTACT WITH CONCRETE BEHIND EACH WEEPHOLE IN ADDITION TO APPROXIMATELY 2 CU. FT. OF CONCRETE SAND (SEE SECTION 1003.02 OF THE LA DOTD STANDARD SPECIFICATIONS).

CONSTRUCTION JOINTS: ALL CONSTRUCTION JOINTS AHOWN ARE OPTIONAL. FOR DETAILS OF KEYED CONSTRUCTION JOINTS SEE LA DOTD STANDARD PLAN CM-49. FOR CONSTRUCTION JOINTS WITHOUT KEY, THE JOINT SURFACE SHALL BE ROUGHENED. HARDENED SURFACE SHALL BE CLEANED. IMMEDIATELY BEFORE NEW CONCRETE IS PLACED, JOINT SURFACE SHALL BE SATURATED WITH WATER.

STATE OF LOUISIANA
STEVEN P. BREEDING
REG. No. 28247
REGISTERED PROFESSIONAL ENGINEER IN CIVIL ENGINEERING
05/21/19

DATE	DESCRIPTION	BY
	REVISIONS	

PARISH	SHEET NO.
ST. JOHN	28

HEADWALL DETAILS

RESERVE AREA
DRAINAGE IMPROVEMENTS
PHASE II

SHREAD - KUYRKENDALL & ASSOC.
ENGINEERS - SURVEYORS - PLANNERS
BATON ROUGE, LOUISIANA

DESIGNED	DRAWN	CHECKED	APPROVED
B.D.N.	J.E.P.	R.W.M.	

S:\CADD\89091\89091\13\HEADWALL DETAIL.DGN

PARISH	SHEET NO.
ST. JOHN	29

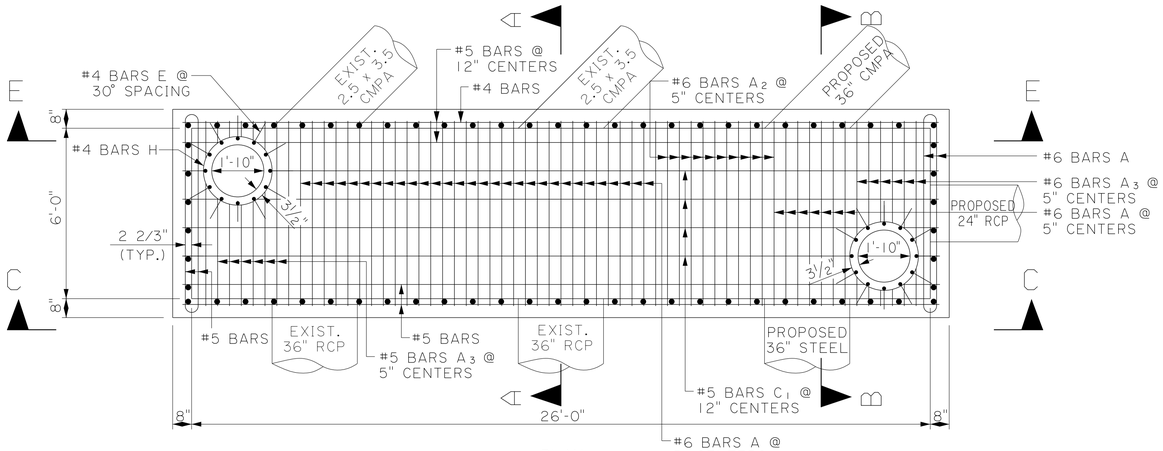

PLAN

SCALE: 3/8" = 1'

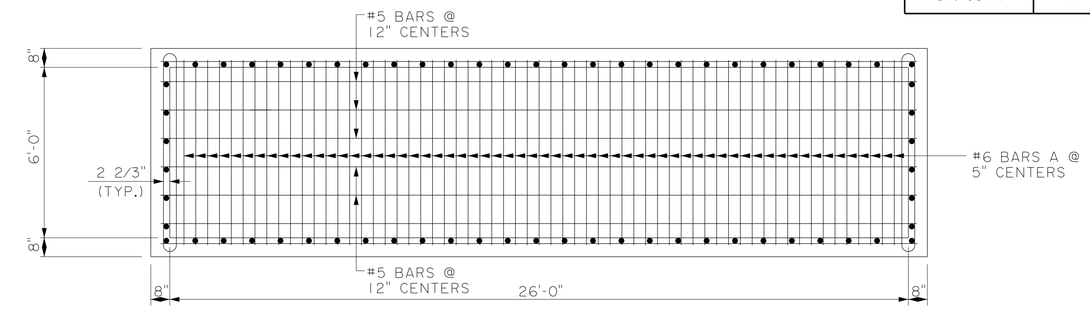

SECTION D-D

SCALE: 3/8" = 1'

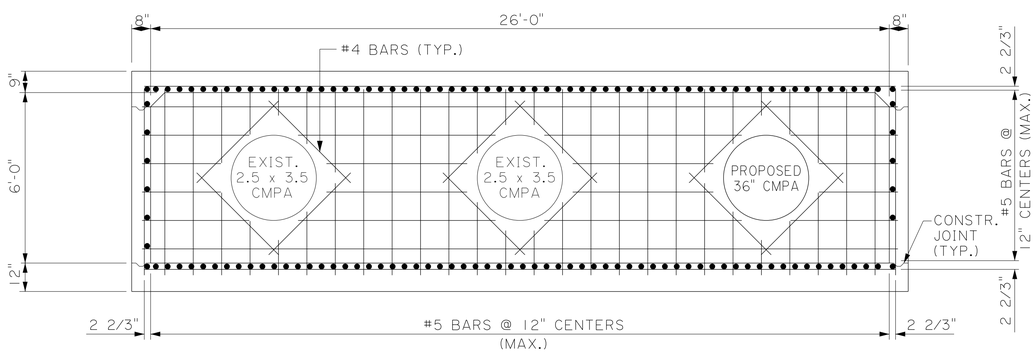

SECTION E-E

SCALE: 3/8" = 1'

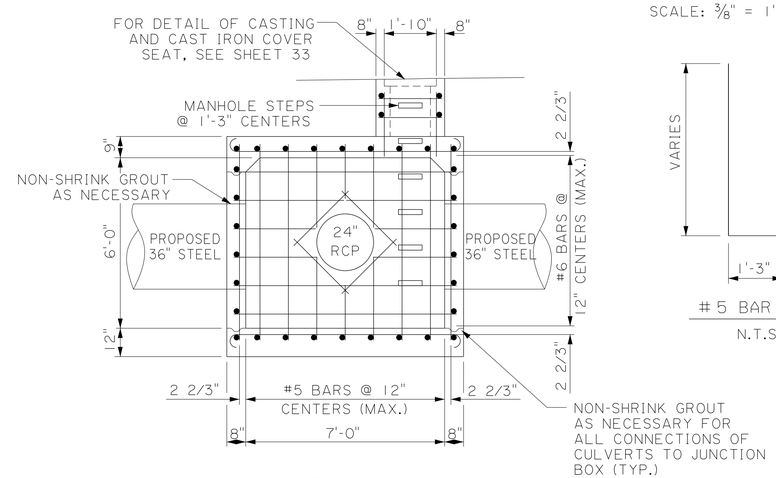

SECTION B-B

SCALE: 3/8" = 1'

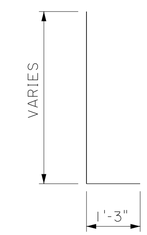

#5 BAR E

N.T.S.

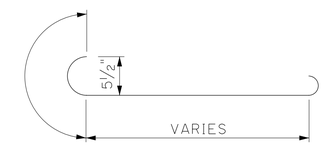

#6 BAR A

N.T.S.

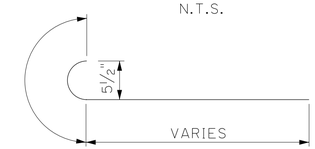

#6 BAR A 2

N.T.S.

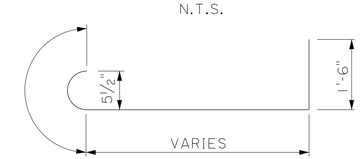

#6 BAR A 3

N.T.S.

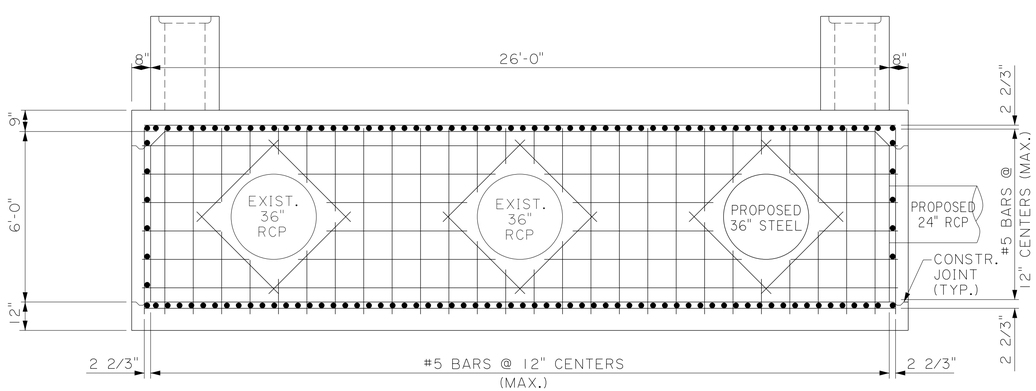

SECTION C-C

SCALE: 3/8" = 1'

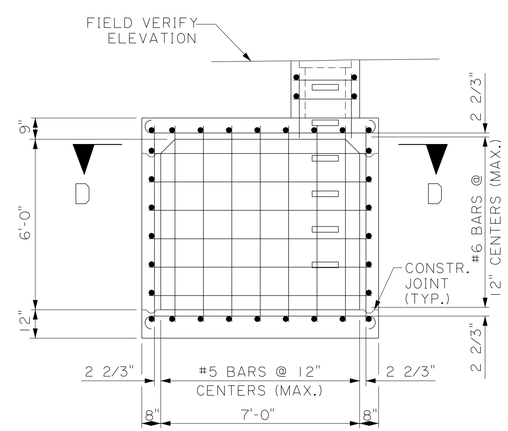

SECTION A-A

SCALE: 3/8" = 1'

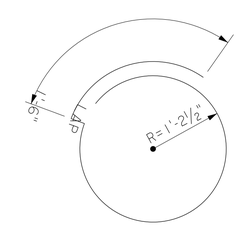

#4 BAR H

N.T.S.

#5 BAR C 1

N.T.S.

NOTES:
CONCRETE: 4,00 PSI
REINFORCING: GRADE 60 KSC

STATE OF LOUISIANA
STEVEN P. BREEDING
REG. No. 28247
REGISTERED PROFESSIONAL ENGINEER IN CIVIL ENGINEERING
05/21/19

DATE	DESCRIPTION	BY

REVISIONS

JUNCTION BOX DETAILS

RESERVE AREA
DRAINAGE IMPROVEMENTS
PHASE II

SHREAD - KUYRKENDALL & ASSOC.
ENGINEERS - SURVEYORS - PLANNERS
BATON ROUGE, LOUISIANA

DESIGNED	DRAWN	CHECKED	APPROVED
B.D.N.	J.E.P.	R.W.M.	

S:\CADD\89091\89091\3\JUNCTION BOX DETAIL.DGN

PARISH	SHEET NO.
ST. JOHN	30

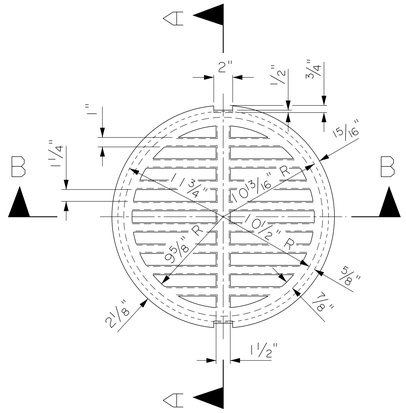

C.I. COVER - PLAN

SCALE: 1 1/2" = 1'

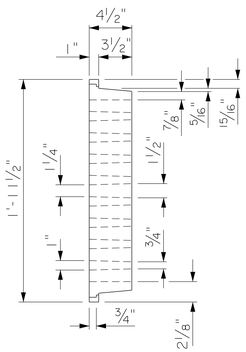

SECTION A-A

SCALE: 1 1/2" = 1'

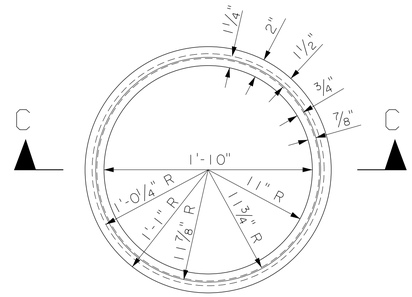

C.I. COVER SEAT - PLAN

SCALE: 1 1/2" = 1'

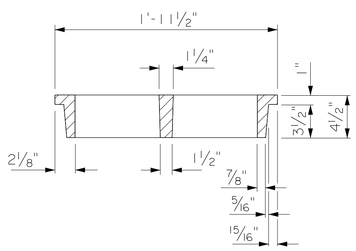

SECTION B-B

SCALE: 1 1/2" = 1'

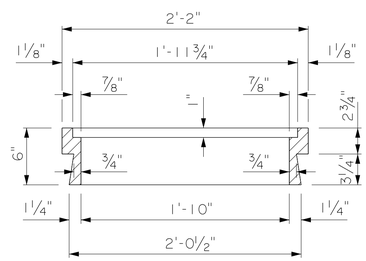

SECTION C-C

SCALE: 1 1/2" = 1'

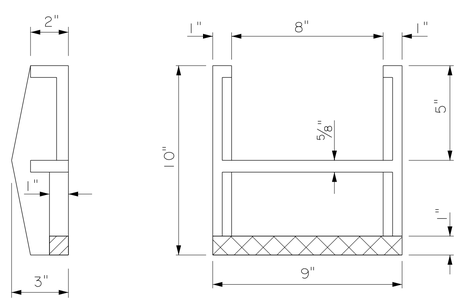

C.I. MANHOLE STEP
(VULCAN VS-1)

SCALE: 3" = 1'

NOTES:

1. GRANULAR MATERIAL WILL BE PLACED AROUND JUNCTION BOX AS NECESSARY.
2. CRUSHED LIMESTONE BEDDING MATERIAL SHALL CONFORM TO LOUISIANA DOTD SPECIFICATIONS 1003.08.
3. GRANULAR MATERIAL SHALL CONFORM TO LOUISIANA DOTD SPECIFICATIONS 1003.07.
4. CONTRACTOR TO PROVIDE 48' MIN. CLEARANCE FOR CAST-IN-PLACE CONCRETE WALLS.
5. CONTRACTOR IS RESPONSIBLE FOR PROVIDING AND INSTALLING, TO A DEPTH SPECIFIED BY ENGINEER, IN ACCORDANCE WITH DOTD STANDARDS ANY STEEL SHEETING AND BRACING OF TRENCH REQUIRED TO INSTALL JUNCTION BOX. (SEE SPECS.)
6. THE LOCATION OF ALL PIPES, DUCTS, UNDERGROUND STRUCTURES, AND UTILITIES IS NOT WARRANTED TO BE EXACT. NOR, IS IT WARRANTED THAT ALL PIPES, DUCTS, UNDERGROUND STRUCTURES, AND UTILITIES ARE SHOWN. THE CONTRACTOR IS RESPONSIBLE FOR LOCATING ALL UTILITIES PRIOR TO CONSTRUCTION.
7. CONTRACTOR SHALL CONTACT JEFFERSON PARISH AND THE RAILROAD AT LEAST (48) HOURS IN ADVANCE BEFORE BEGINNING OPERATIONS. THE CONTRACTOR IS ALSO RESPONSIBLE FOR CONTACTING ALL OTHER PRIVATE UTILITY COMPANIES TO ENSURE THAT ALL UTILITIES ARE LOCATED ACCURATELY PRIOR TO EXCAVATION, THE CONTRACTOR WILL NOT PROCEED WITH HIS EXCAVATION UNTIL ALL UTILITY COMPANIES, PRIVATE AND PUBLIC, HAVE BEEN CONTACTED BY THE CONTRACTOR.
8. ALL ELEVATIONS REFER TO NAVD 88.
9. CONTRACTOR IS RESPONSIBLE FOR MAINTAINING ALL EXISTING DRAINAGE DURING CONSTRUCTION.
10. CONTRACTOR MAY CONSTRUCT TEMPORARY DAMS TO PERMIT DEWATERING FOR CONSTRUCTION. CONTRACTOR MAY SUBMIT TO THE ENGINEER THE LOCATION AND ELEVATIONS OF ANY TEMPORARY DAMS HE PROPOSES TO ERECT AND RECEIVE THE ENGINEER'S APPROVAL PRIOR TO PLACING DAMS. JEFFERSON PARISH TEMPORARY DAM REQUIREMENTS ARE DETAILED IN THE SPECIAL PROVISIONS.
11. FILL ANY VOIDS AROUND PIPES ENTERING JUNCTION BOX WITH NON-SHRINK GROUT.
12. CONTRACTOR IS RESPONSIBLE FOR MAKING ALL NECESSARY CONNECTIONS OF EXISTING AND PROPOSED CULVERTS TO THE JUNCTION BOX.
13. CONTRACTOR SHALL ENSURE THAT C.M.P. AND SECURING BANDS ARE WRAPPED IN CONFORMANCE WITH LOUISIANA DOTD SPECIFICATION 701.06(C)(1).
14. DUE TO THE SEVERE GRADE CHANGES BETWEEN THE DIFFERENT SECTIONS OF C.M.P., THE REQUIRED DEFLECTIONS CANNOT BE ACHIEVED WITH THE SPECIFIED SECURING BANDS. THE ENTIRE LENGTH WILL HAVE TO BE SPECIALLY FABRICATED TO THE EXACT DIMENSIONS AND GRADES.
15. CONTRACTOR IS RESPONSIBLE FOR EXPOSING AND VERIFYING LOCATION AND DEPTH OF SEWER FORCE MAIN AND WATERLINE PRIOR TO ORDERING SPECIAL FABRICATED C.M.P. AND PRIOR TO ALL CONSTRUCTION.
16. C.M.P. SHALL CONFORM TO LA DOTD SPECIFICATION 1007.03, SHALL HAVE A FIBER BONDED BITUMINOUS COATING, SHALL BE 14 GAGE, AND HAVE 3' X 1' CORRUGATIONS. ANY REFERENCE TO C.M.P. ON THESE PLANS OR SPECIFICATIONS DENOTES THAT THE PIPE SHALL BE FIBER BONDED BITUMINOUS COATED CORRUGATED METAL PIPE.
17. THIS PROJECT SHALL MEET OR EXCEED LA DOTD SPECIFICATIONS.

STATE OF LOUISIANA
STEVEN P. BREEDING
REG. NO. 28247
REGISTERED
PROFESSIONAL ENGINEER
IN
CIVIL ENGINEERING
05/21/19

JUNCTION BOX DETAILS

RESERVE AREA
DRAINAGE IMPROVEMENTS
PHASE II

SHREAD - KUYRKENDALL & ASSOC.
ENGINEERS - SURVEYORS - PLANNERS
BATON ROUGE, LOUISIANA

DATE	DESCRIPTION	BY

REVISIONS

DESIGNED	DRAWN	CHECKED	APPROVED
B.D.N.	J.E.P.	R.W.M.	

S:\CADD\89091\89091S\JUNCTION BOX DETAIL_2.DGN

PARISH	SHEET NO.
ST. JOHN	31

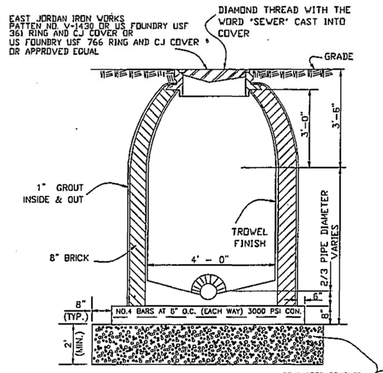

STANDARD SEWER MANHOLE

N.T.S.

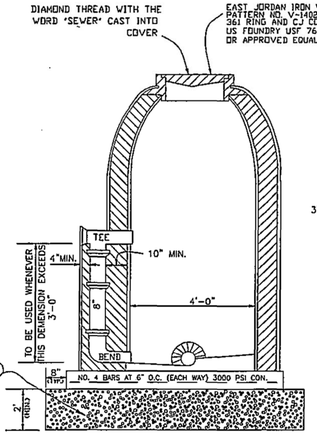

DROP SEWER MANHOLE

N.T.S.

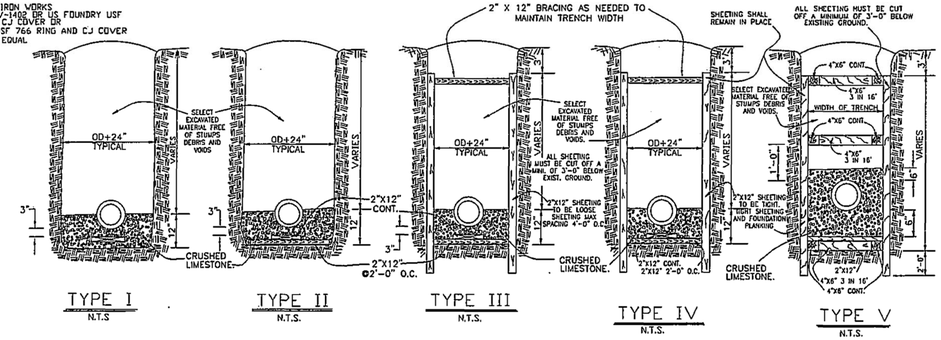

TYPE I — N.T.S. | TYPE II — N.T.S. | TYPE III — N.T.S. | TYPE IV — N.T.S. | TYPE V — N.T.S.

SANITARY SEWER STANDARD TRENCH DETAILS

N.T.S.

NOTE:

TIMBER SHEETING AND BRACING SHOWN ABOVE ARE MIN. REQUIREMENTS TO CONTROL THE WIDTH OF THE EXCAVATED TRENCH AND TO SAFEGUARD THE INTEGRITY OF THE SEWER FOUNDATION, BEDDING AND BACKFILL. IN ADDITION TO THESE MIN. REQUIREMENTS, THE CONTRACTOR SHALL PROVIDE SUFFICIENT SHEETING AND BRACING TO PROVIDE SAFE WORKING CONDITIONS FOR HIS WORKMEN.

SEWERAGE BEDDING TYPE VS DEPTH (FEET)

SOIL TYPE	0-4	4-6	6-8	8-10
17	I	II	III	V
6	I	II	III	V
16	II	II	III	V
14	II	II	III	V
13	II	II	III	V
3	II	III	IV	V
9	II	III	IV	V
5	II	III	IV	V
20	II	III	IV	V
18	II	III	IV	V
4	II	III	IV	V
1	II	III	IV	V
11	II	III	IV	V
2	II	III	IV	V
8	II	III	IV	V

BACKFILL WITH SELECT EXCAVATED MATERIAL FREE OF STUMPS, DEBRIS, AND VOIDS. BACKFILL MATERIAL BENEATH AND WITHIN 24 INCHES OF ROADWAY PAVING SHALL CONSIST OF PUMP RIVER SAND COMPACTED BY FLOODING TO 97% MAXIMUM DENSITY. CONTINUOUS NON-WOVEN GEOTEXTILE MATERIAL SHALL BE PLACED OVER BOTH THE PIPE AND THE TOP OF THE BEDDING MATERIAL. THE FABRIC SHALL EXTEND 12 INCHES ABOVE THE TOP OF THE PIPE ALONG THE TRENCH WALLS WITH A 24 INCH OVERLAP BETWEEN SHEETS.

NOTE:

BEDDING MATERIALS FOR HOUSE CONNECTIONS TO BE IN CONFORMANCE WITH THE FOLLOWING SCHEDULE.

TYPE OF MAIN SEWER BEDDING	TYPE OF REQUIRED HOUSE CONNECTION BEDDING
V	IV
IV	III
III	II
II	I
I	CRUSHED LIME STONE OR GRAVEL ONLY

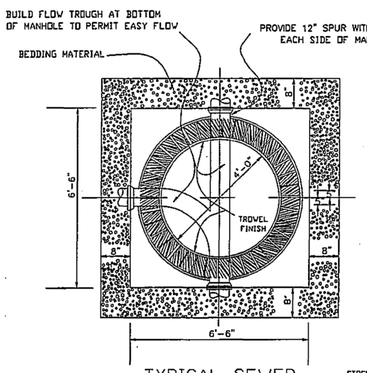

TYPICAL SEWER MANHOLE BOTTOM

N.T.S.

NOTE: PRE-FABRICATED CONCRETE MANHOLES PER LADOTD REQUIREMENTS ARE ACCEPTABLE ALTERNATE.

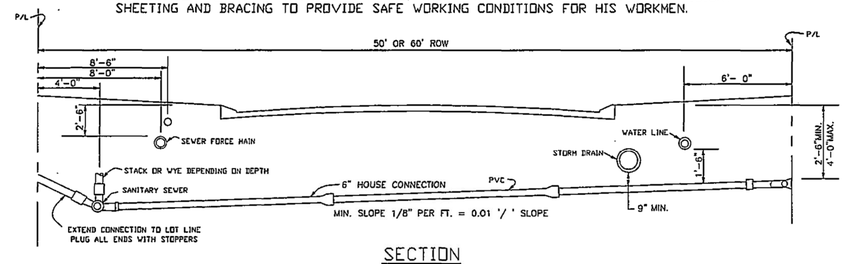

SECTION

N.T.S.

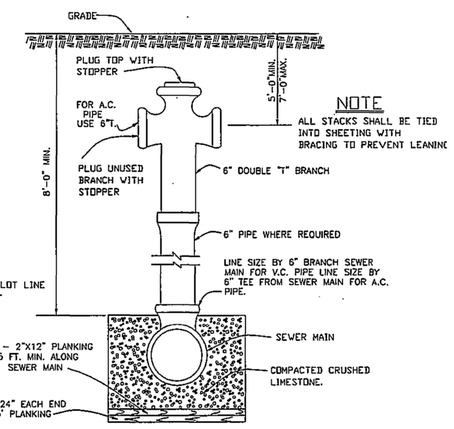

NOTE

ALL STACKS SHALL BE TIED INTO SHEETING WITH BRACING TO PREVENT LEANING

DETAIL OF RISER

N.T.S.

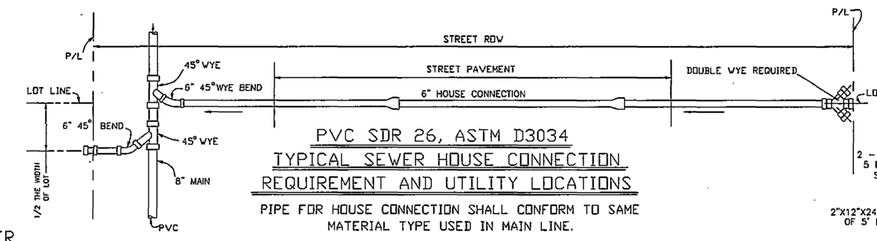

PVC SDR 26, ASTM D3034

TYPICAL SEWER HOUSE CONNECTION REQUIREMENT AND UTILITY LOCATIONS

PIPE FOR HOUSE CONNECTION SHALL CONFORM TO SAME MATERIAL TYPE USED IN MAIN LINE.

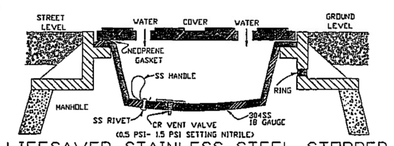

LIFESAVER STAINLESS STEEL STOPPER

N.T.S.

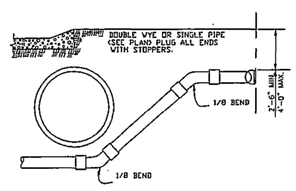

HOUSE CONNECTION UNDER DEEP DRAIN

N.T.S.

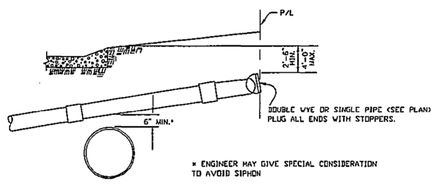

HOUSE CONNECTION OVER DRAIN

N.T.S.

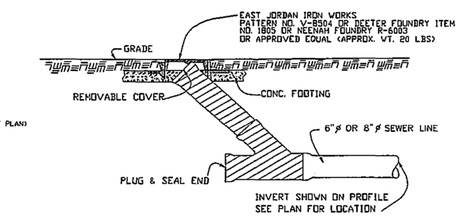

CLEANOUT DETAIL

N.T.S.

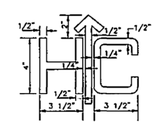

NOTE:

1. CONTRACTOR TO HAVE BRAND FABRICATED & SUBMIT TO ENGINEER FOR APPROVAL

2. LETTERS TO BE IMPRESSED IN FACE OF ROLL OVER CURB AT EACH SEWER HOUSE CONNECTION. IMPRESSIONS SHALL NOT BE MORE THAN 1/2" NOR LESS THAN 1/4"

LETTER DETAIL FOR HOUSE CONNECTION MARKING DEVICE

N.T.S.

STATE OF LOUISIANA
STEVEN P. BREEDING
REG. No. 28247
REGISTERED PROFESSIONAL ENGINEER IN CIVIL ENGINEERING
05/21/19

DATE	DESCRIPTION	BY
	REVISIONS	

STANDARD SEWER DETAILS

RESERVE AREA DRAINAGE IMPROVEMENTS PHASE II

SHREAD - KUYRKENDALL & ASSOC.
ENGINEERS - SURVEYORS - PLANNERS
BATON ROUGE, LOUISIANA

DESIGNED	DRAWN	CHECKED	APPROVED
B.D.N.	J.E.P.	R.W.M.	

S:\CADD\89091\89091\SHEET 36_ DETAIL.DGN

PARISH	SHEET NO.
ST. JOHN	32

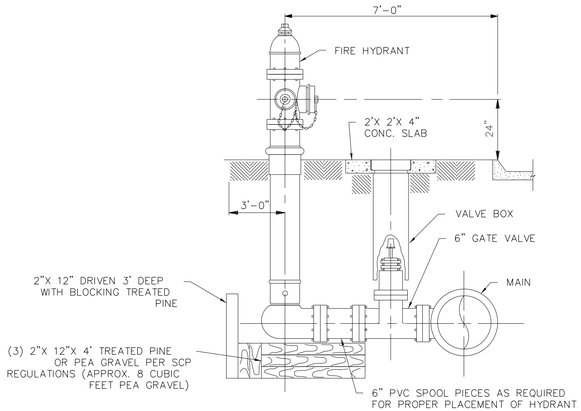

FIRE HYDRANT ASSEMBLY DETAIL

N.T.S.

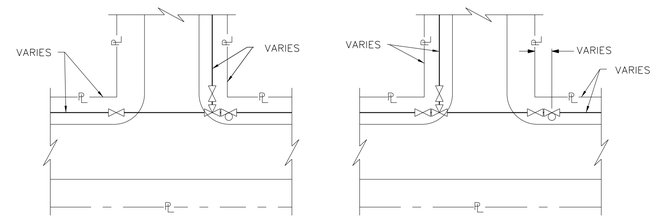

TYPICAL FIRE HYDRANT AND VALVE LOCATIONS AT INTERSECTIONS

N.T.S.

NOMINAL PIPE SIZE	MINIMUM LENGTH TO BE RESTRAINED ON EACH SIDE OF FITTING (FT.)				
	ELBOWS				
	11 1/4°	22 1/2°	45°	90°	RUN OF & BRANCH TEES
6"	6	11	22	17	52
8"	7	14	28	22	68
12"	10	19	40	31	96
20"	15	30	62	47	124

NOTE; FOR REDUCERS, UNEQUAL BRANCH VS. RUN TEES AND VERTICAL OFFSETS RESTRAINING WILL BE CASE SPECIFIC. ENGINEER WILL PROVIDE MINIMUM RESTRAINING FOR THESE SPECIAL CASES.

D.I. THRUST RESTRAINING

N.T.S.

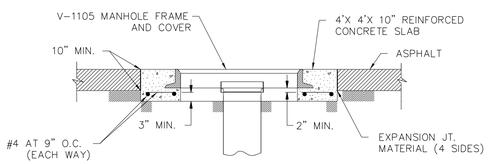

VALVE BOX TOP FOR TRAFFIC AREAS

VULCAN FOUNDRY CORP. VM-5 W/COVER.
(V-1105)

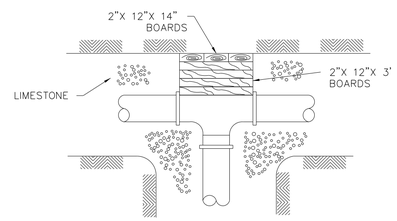

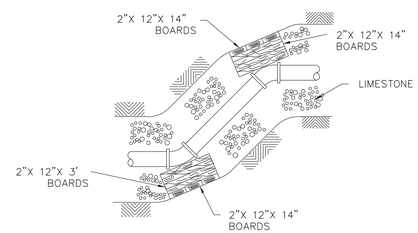

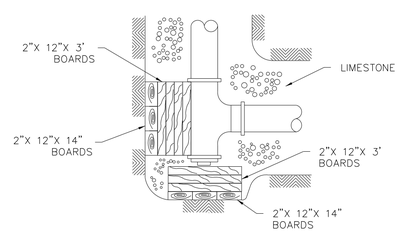

THRUST BLOCKING DETAILS *

N.T.S.

NOTE:

NUMBERS AND DIMENSIONS OF REQUIRED BOARDS WILL DEPEND ON THE PIPE SIZE AND TRENCH WIDTH AND SHALL BE DESIGNED ACCORDINGLY. BOARD DIMENSIONS SHOWN ARE TYPICAL FOR EIGHT-INCH PIPE. BOARD SHALL BE CYPRESS, PRESSURE TREATED TIMBER OR OAK DUNNAGE.

* UNLESS FIELD CONDITIONS AND / OR SPECIAL DESIGN CONDITIONS NECESSITATE, USE OF THRUST BLOCKING SHALL NOT BE PERMITTED. THRUST BLOCKS ARE PERMITTED ONLY WHEN AN ADEQUATE LENGTH OF PIPE CAN NOT BE RESTRAINED DUE TO FIELD CONDITIONS AND/OR FOR TEMPORARY CONSTRUCTION.

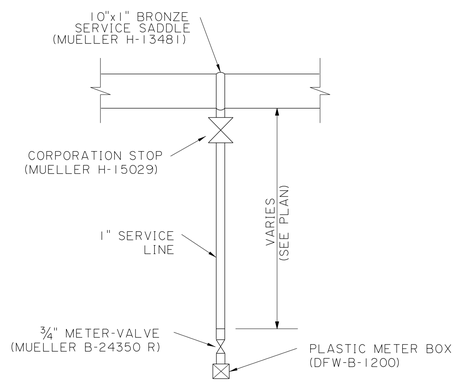

TYPICAL SERVICE CONNECTION DETAIL

N.T.S.

MIN. COVER		PIPE SIZE (IN.)
3 FT.		8-10

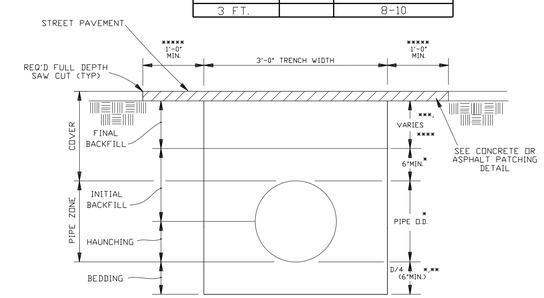

WATER MAIN STANDARD TRENCH DETAIL

FOR D.I., PVC-C900, PVC-C905 AND HDPE(MIN.THICKNESS, DR.17) PIPES

N.T.S.

NOTES:

* COMPACTED SAND, ASTM 2321 CLASS II (SW OR SP) MIN. DENSITY 95% STANDARD PROCTOR (ASTM D698) 6" MAX. LAYERS.

** PROVIDE BELL HOLES AT EACH JOINT.

*** SELECT EXCAVATED MATERIAL FREE OF STUMPS, DEBRIS AND VOIDS (CANAL BANKS ONLY).

**** NON-PLASTIC EMBANKMENT WITHIN THE STREETS RIGHT OF WAY. MIN. DESITY 95% STANDARD PROCTOR (ASTM D698)

***** NOT REQ'D IN NON-PAVED AREA LOCATIONS.

NOTES:

1. WHERE GROUND WATER OR UNSTABLE TRENCH BOTTOM EXISTS, TRENCH BOTTOM SHALL BE STABILIZED (ASTM D2321) TO PROVIDE A WORKING PLATFORM.
2. TRENCH DETAIL SHOWN WILL BE MIN. REQUIREMENTS TO SAFEGUARD THE INTEGRITY OF THE WATER LINE INSTALLATION AT HEREIN-SPECIFIED DEPTHS. THE CONTRACTOR SHALL PROVIDE SUFFICIENT SHEETING AND BRACING TO PROVIDE SAFE WORKING CONDITIONS FOR HIS WORKMEN.

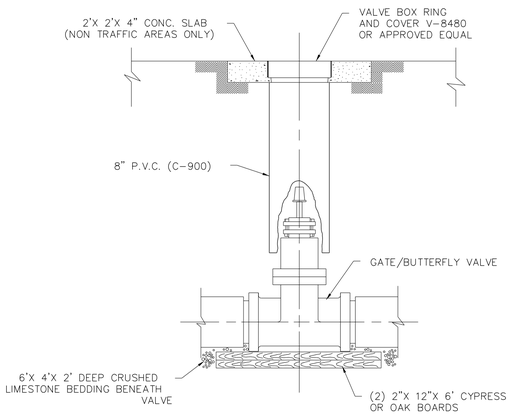

VALVE BOX DETAIL

N.T.S.

STATE OF LOUISIANA
STEVEN PJ BREEDING
REG. No. 28247
REGISTERED PROFESSIONAL ENGINEER IN CIVIL ENGINEERING
05/21/19

STANDARD WATERLINE DETAILS

RESERVE AREA
DRAINAGE IMPROVEMENTS
PHASE II

SHREAD - KUYRKENDALL & ASSOC.
ENGINEERS - SURVEYORS - PLANNERS
BATON ROUGE, LOUISIANA

DATE	DESCRIPTION	BY
	REVISIONS	

DESIGNED	DRAWN	CHECKED	APPROVED
B.D.N.	J.E.P.	R.W.M.	

S:\CADD\89091\89091\3\SHEET 37_ DETAIL.DGN

PARISH	SHEET NO.
ST. JOHN	33

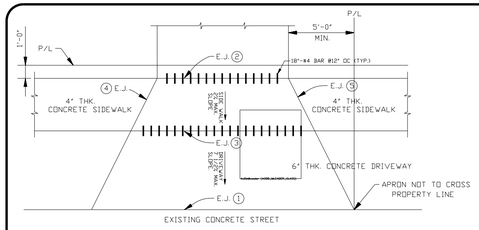

EXPANSION JOINT DETAIL FOR NEW DRIVEWAY

(N.T.S.)

DETAIL "A"

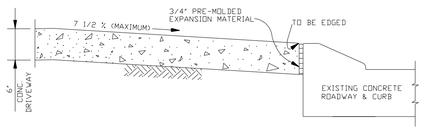

NEW DRIVEWAY CONNECTION TO EXISTING CONCRETE ROADWAY WITH ROLLOVER CURB (CURB TO REMAIN)

(N.T.S.)

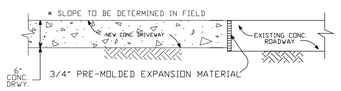

NEW DRIVEWAY CONNECTION TO EXISTING CONCRETE ROADWAY WITHOUT CURB

(N.T.S.)

RESIDENTIAL DRIVEWAY SPECIFICATIONS

1. ALL DRIVEWAYS SHALL BE CONSTRUCTED OF PORTLAND CEMENT CONCRETE AND HAVE A COMPRESSIVE STRENGTH OF THREE THOUSAND (3000) POUNDS PER SQUARE INCH IN TWENTY-EIGHT DAYS.
2. ALL (PCC) DRIVEWAYS SHALL HAVE A MINIMUM THICKNESS OF SIX (6) INCHES.
3. TRANSITIONS WHERE SIDEWALKS MEET DRIVEWAYS SHALL NOT EXCEED ONE (1) INCH DROP EVERY TWELVE (12) INCHES.

OPTION #1

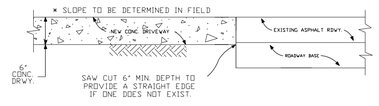

OPTION #2

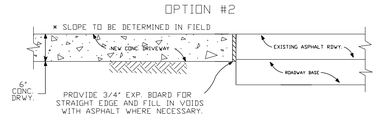

NEW DRIVEWAY CONNECTION TO EXISTING ASPHALT ROADWAY WITHOUT CURB.

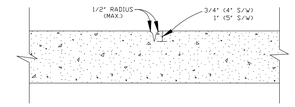

HAND TOOLED CONTRACTION JOINT

(MAXIMUM SPACING = 4'-0")
SCALE:4" = 1'

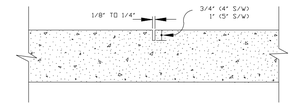

SAWED CONTRACTION JOINT

MAXIMUM SPACING = 4'-0"

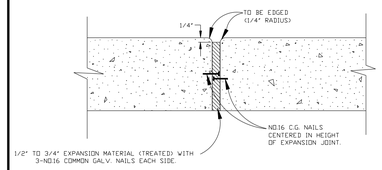

EXPANSION JOINT

(MAXIMUM SPACING = 20'-0")

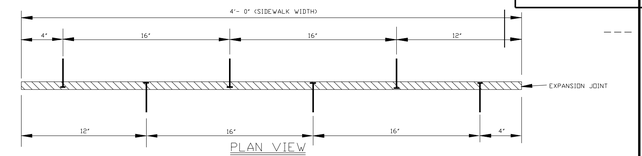

PLAN VIEW

LAYOUT PLAN FOR NO.16 COMMON GALV. NAILS AT EXPANSION JOINTS

N.T.S.

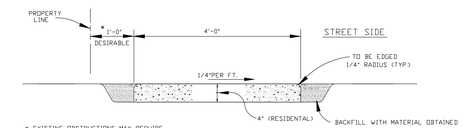

TYPICAL CUT SECTION

N.T.S.

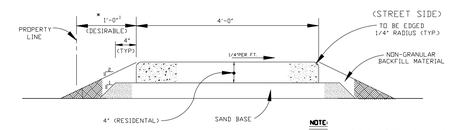

NOTE:
4"DIA. X 6' LONG PVC PIPE (HEAVY DUTY) TO BE PLACED UNDER SIDEWALK IN FILL SECTIONS AT INTERVALS NOT EXCEEDING 30'.

TYPICAL FILL SECTION

N.T.S.

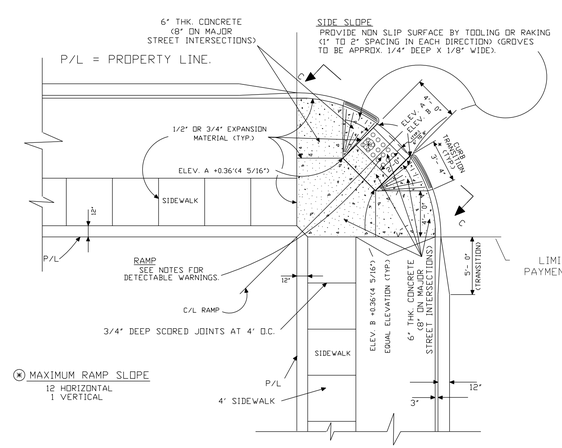

PLAN OF TYPICAL SIDEWALK WITH RAMP FOR HANDICAPPED

N.T.S.

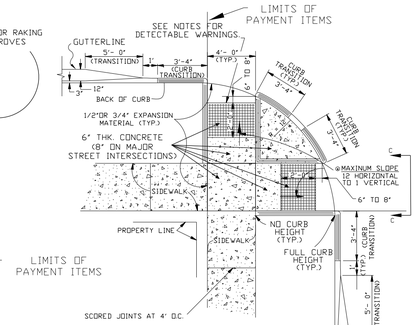

ALTERNATE #1

PLAN OF CURB RAMP FOR THE HANDICAPPED

N.T.S.

NOTES:

1. TRUNCATED DOMES IN A DETECTABLE WARNING SURFACE SHALL HAVE A BASE DIAMETER OF 0.9 INCHES (23 mm) MINIMUM TO 1.4 INCHES (36 mm) MAXIMUM, A TOP DIAMETER OF 50% OF THE BASE DIAMETER MINIMUM TO 65% OF THE BASE DIAMETER MAXIMUM, AND A HEIGHT OF 0.2 INCHES (5 mm).
2. TRUNCATED DOMES IN A DETECTABLE WARNING SURFACE SHALL HAVE A CENTER-TO-CENTER SPACING OF 1.6 INCHES (41 mm) MINIMUM AND 2.4 INCHES (61 mm) MAXIMUM, AND A BASE-TO-BASE SPACING OF 0.65 INCHES (16 mm) MINIMUM, MEASURED BETWEEN THE MOST ADJACENT DOMES ON SQUARE GRID.
3. TRUNCATED DOMES SURFACES SHALL CONTRAST VISUALLY WITH ADJACENT WALKING SURFACES EITHER LIGHT-ON-DARK, OR DARK ON LIGHT.
4. THE MATERIAL USED TO PROVIDE CONTRAST SHALL BE AN INTEGRAL PART OF THE WALKING SURFACE. DETECTABLE WARNINGS USED ON INTERIOR SURFACES SHALL DIFFER FROM ADJOINING WALKING SURFACES IN RESILIENCY OR SOUND-ON-CANE CONTACT.
5. TRUNCATED DOMES ON CURB RAMPS WITHIN THE STREET R.O.W. SHALL BE PREFABRICATED DETECTABLE WARNING UNITS INSTALLED DIRECTLY IN NEWLY POURED CONCRETE.
6. TRUNCATED DOMES SHALL COVER AT LEAST 2 FEET IN DEPTH AND EXTEND FULL WIDTH OF THE RAMP. ANY RAMP HAVING FLARED SIDES WILL NOT BE REQUIRED TO HAVE THESE DETECTABLE WARNINGS ON THE FLARES.
7. THE LIMITS OF THE MAIN SURFACE OF THE RAMP ON WHICH THE DETECTABLE WARNINGS ARE PLACED SHALL HAVE A REDDISH COLOR SIMILAR TO THAT OF "TERRA COTTA". THE COLOR MUST BE APPROVED BY ST. JOHN THE BAPTIST PARISH DEPARTMENT OF ENGINEERING.
8. STAMPING OF TRUNCATED DOMES WITHIN THE R.O.W. WILL NOT BE ALLOWED.

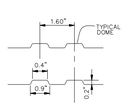

SECTION THRU TRUNCATED DOMES

(ADAAG DETECTABLE WARNINGS ON WALKING SURFACES 05/06/02)
N.T.S.

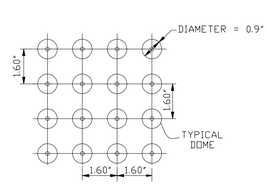

PARTIAL PLAN OF TRUNCATED DOMES

(ADAAG DETECTABLE WARNINGS ON WALKING SURFACES 05/06/02)
(N.T.S.)

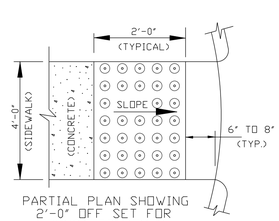

PARTIAL PLAN SHOWING 2'-0" OFF SET FOR TRUNCATED DOMES

N.T.S.

STATE OF LOUISIANA
STEVEN R. BREEDING
REG. No. 28247
REGISTERED PROFESSIONAL ENGINEER IN CIVIL ENGINEERING
05/21/19

STANDARD SIDEWALK DETAILS

RESERVE AREA
DRAINAGE IMPROVEMENTS
PHASE II

SHREAD - KUYRKENDALL & ASSOC.
ENGINEERS - SURVEYORS - PLANNERS
BATON ROUGE, LOUISIANA

DATE	DESCRIPTION	BY
	REVISIONS	

DESIGNED	DRAWN	CHECKED	APPROVED
B.D.N.	J.E.P.	R.W.M.	

S:\CADD\8509\8509113\SHEET 38- DETAIL.DGN

PARISH	SHEET NO.
ST. JOHN	34

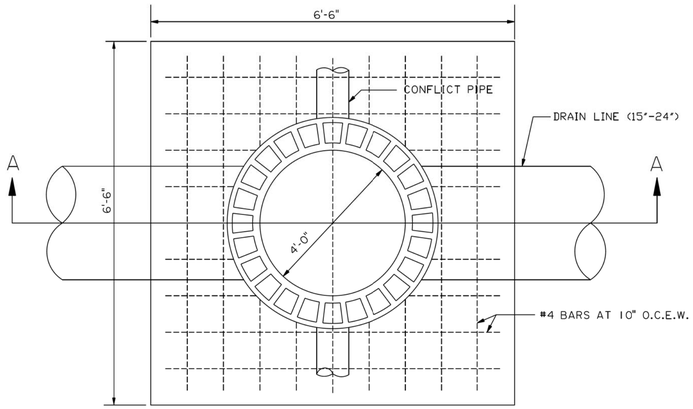

PLAN
N.T.S.

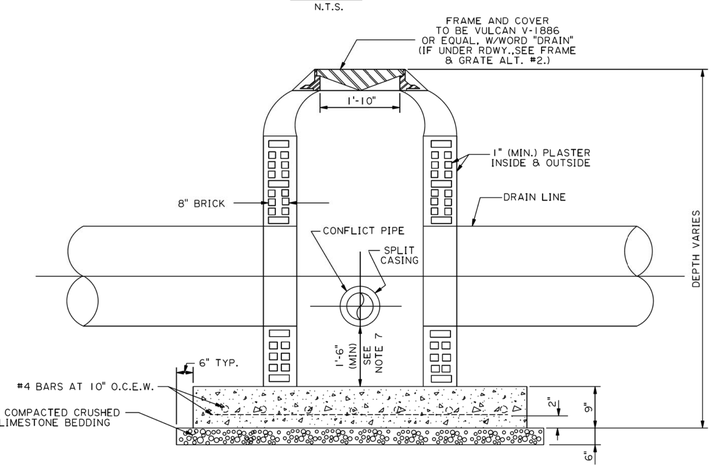

SECTION "A - A" (ALT. #1)
N.T.S.

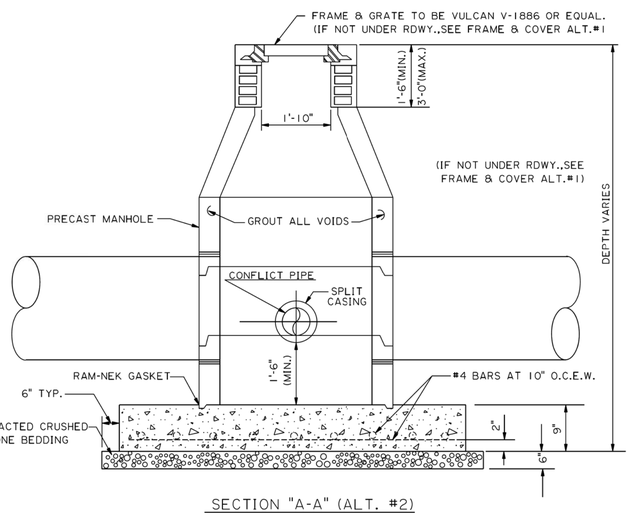

SECTION "A-A" (ALT. #2)
N.T.S.

CONFLICT BOX DRAIN LINE (15"-24")
N.T.S.

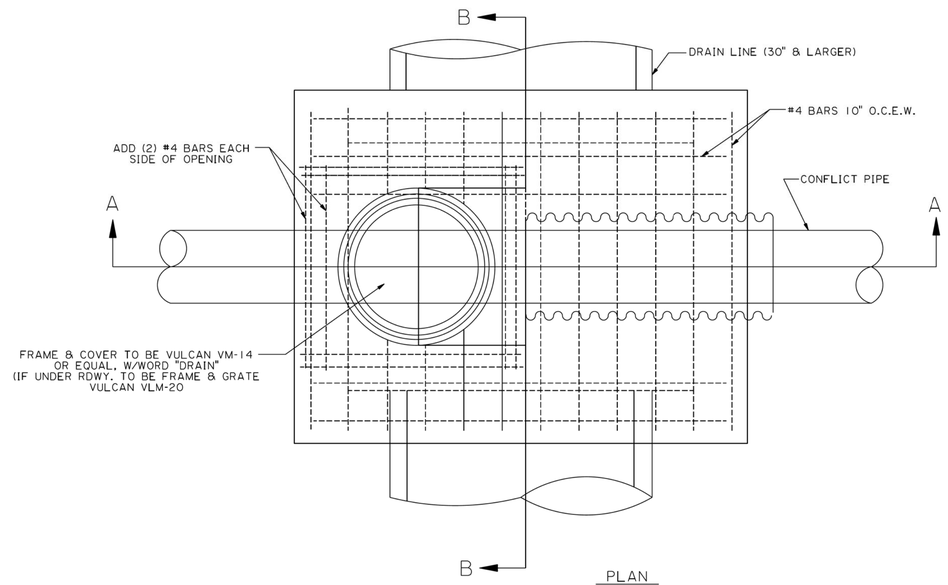

PLAN
N.T.S.

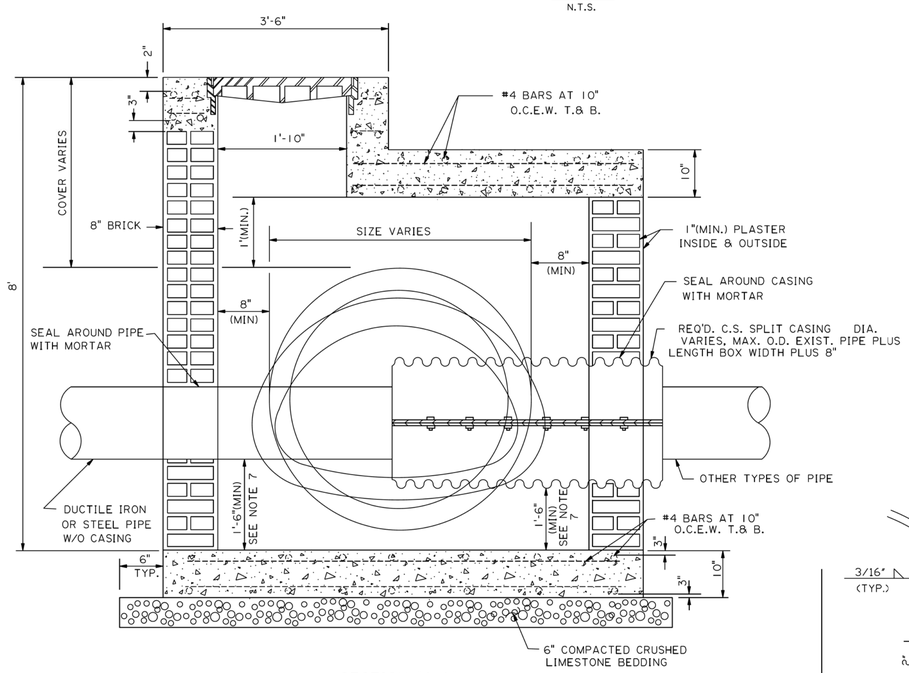

SECTION "A-A"
N.T.S.

CONFLICT BOX DRAIN LINE (30" & LARGER)
N.T.S.

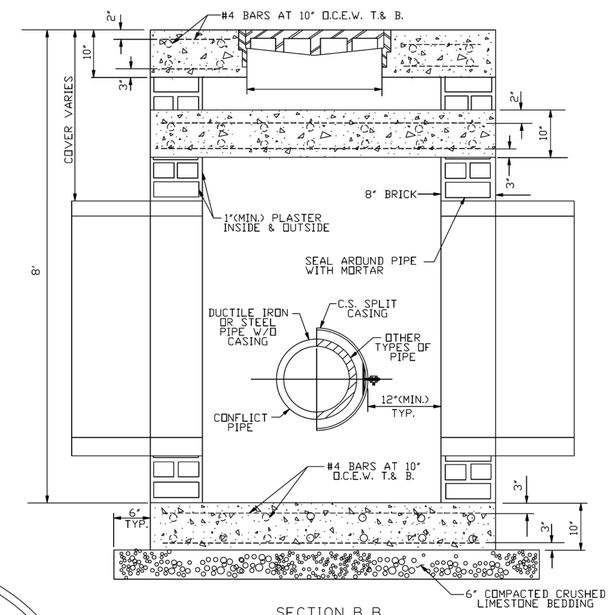

SECTION B B
N.T.S.

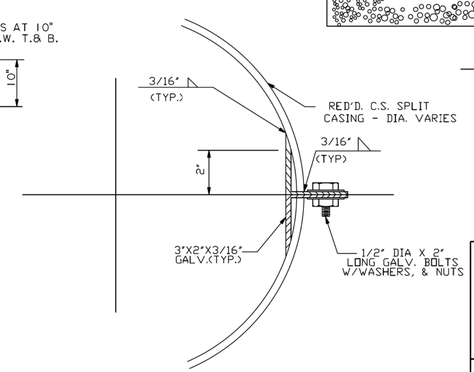

SPLIT CASING DETAIL
N.T.S.

STATE OF LOUISIANA
STEVEN R. BREEDING
REG. NO. 28247
REGISTERED PROFESSIONAL ENGINEER IN CIVIL ENGINEERING
05/21/19

CONFLICT BOX DETAILS

RESERVE AREA
DRAINAGE IMPROVEMENTS
PHASE II

SHREAD - KUYRKENDALL & ASSOC.
ENGINEERS - SURVEYORS - PLANNERS
BATON ROUGE, LOUISIANA

DATE	DESCRIPTION	BY
	REVISIONS	

DESIGNED	DRAWN	CHECKED	APPROVED
B.D.N.	J.E.P.	R.W.M.	

S:\CADD\89091-89091\-CONFLICT BOX DETAIL.DGN