ST. JOHN THE BAPTIST PARISH

ST. JOHN THE BAPTIST UV DISINFECTION ASSEMBLY FOR LIONS WATER TREATMENT PLANT

C.J. SAVOIE
CONSULTING ENGINEERS, INC.
ENGINEERS
DESIGNERS
PLANNERS

PARISH PRESIDENT

NATALIE ROBOTTOM

COUNCIL

MARVIN PERRILLOUX - DISTRICT IV- CHAIRPERSON

LUCIEN J. GAUFF, III -DIVISION A
JACLYN HOTARD - DIVISION B
ART SMITH - DISTRICT I
RANNEY WILSON - DISTRICT II
LENNIX MADERE, JR. - DISTRICT III
MICHAEL WRIGHT - DISTRICT V
LARRY SNYDER - DISTRICT VI
CHERYL MILLET - DISTRICT VII

JANUARY, 2015

INDEX

TITLE SHEET & INDEX G.1
PROJECT LOCATION & VICINITY MAPS G.2

PROPOSED SITE PLAN C.1
PROP. PLAN VIEW C.2
UV DISINFECTION PLAN & DETAILS C.3
BUILDING ELEVATIONS & SECTION PLAN A.1
BUILDING FOUNDATION PLAN & DETAILS A.2
BUILDING ROOF PLAN & DETAILS A.3
BUILDING ELECTRICAL PLAN . . . . . E.SITE

ST. JOHN THE BAPTIST PARISH

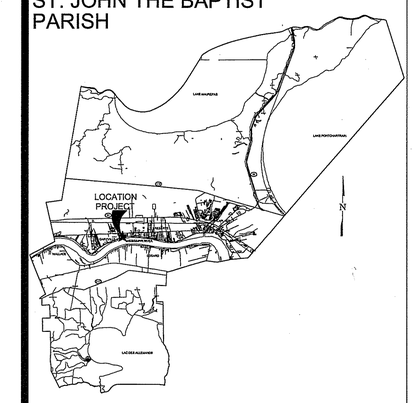

STAMP & SIGN :

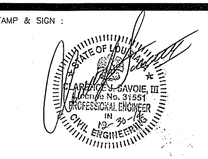

PROJECT NUMBER : S-84-125

SHEET NUMBER : G.1

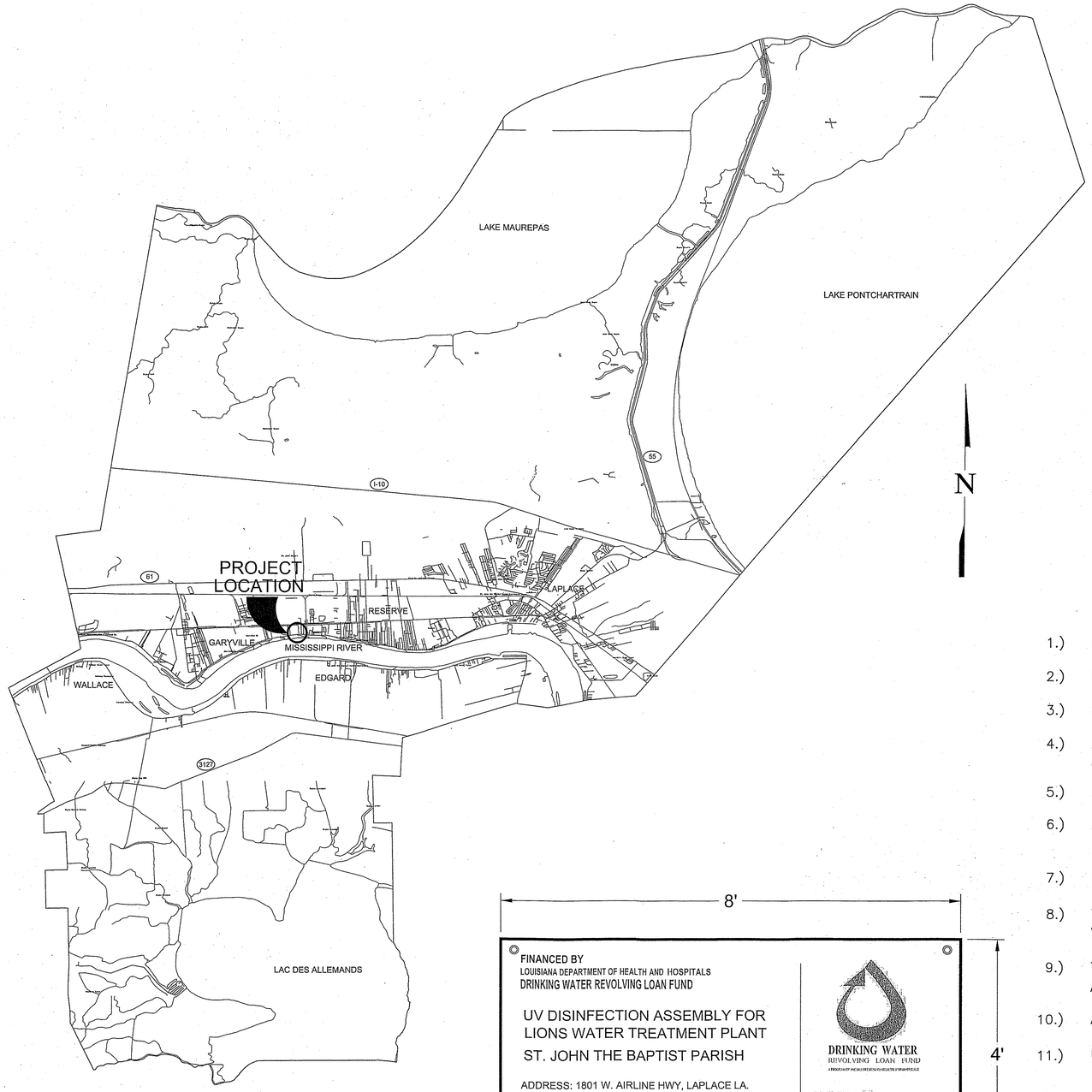

LOCATION MAP

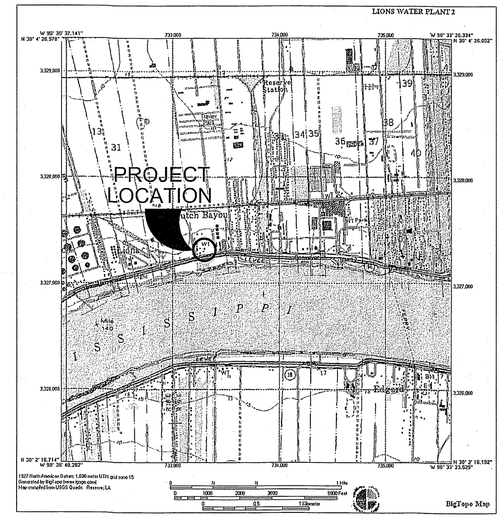

VICINITY MAP

GENERAL NOTES

1.) ENGINEER, C.J. SAVOIE CONSULTING ENGINEERS, INC. TO BE CONTACTED PRIOR TO ANY FIELD CHANGES. PH# (985)369-2341.

2.) NOTIFY LIONS WATER PLANT MANAGER PRIOR TO CONSTRUCTION. CARL DESSELLE – PH. # (985) 536-4396.

3.) CONTACT "LOUISIANA ONE-CALL CENTER" PRIOR TO CONSTRUCTION. PH. # 1-800-272-3020

4.) ALL CONSTRUCTION SHALL BE IN ACCORDANCE WITH INDUSTRY STANDARDS AND MEET THE REQUIRED NATIONAL CODES AS THEY APPLY TO EACH PERFORMING TRADE.

5.) CONSTRUCTION SURVEYING SHALL BE THE RESPONSIBILITY OF THE CONTRACTOR.

6.) ALL ELECTRICAL AND INSTRUMENTATION PANELS, ARE TO BE INSTALLED IN ACCORDANCE WITH ALL APPLICABLE NATIONAL ELECTRIC CODES (NEC).

7.) LOCAL GAS COMPANY AND OTHER ENCOUNTERED UTILITIES SHALL BE NOTIFIED PRIOR TO EXCAVATION.

8.) THE CONTRACTOR SHALL NOT DAMAGE ANY OTHER UNDERGROUND OR OVERHEAD FACILITIES SUCH AS WATER PIPING, WATER METERS, POWER LINES, ETC. WHEN SUCH IS DAMAGED, THE CONTRACTOR SHALL REPLACE AT HIS EXPENSE.

9.) THE CONTRACTOR SHALL PROVIDE ALL NECESSARY BARRICADES, SIGNS AND WARNING DEVICES TO PREVENT ACCIDENTS BY PEDESTRIANS AND VEHICULAR TRAFFIC.

10.) ANY ALTERATIONS TO CONSTRUCTION OR MATERIALS MUST BE APPROVED BY THE PROJECT ENGINEER.

11.) UPON COMPLETION OF THE PROJECT, THE SITE SHALL BE LEFT WITH A NEAT AND ORDERLY APPEARANCE.

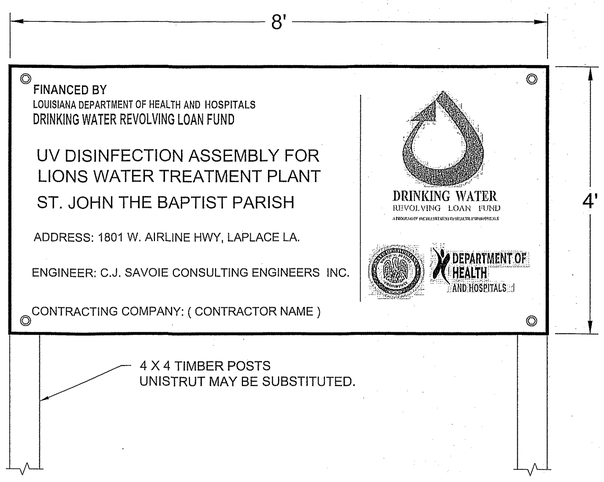

PROJECT SIGN DETAIL

PROJECT SIGN NOTES:

THIS IS A 4' X 8' SIGN TO BE PRODUCED IN OUTDOOR RIGID MATERIAL, WHICH CAN BE PLYWOOD OR ALLOWABLE SUBSTITUTE WITH A WHITE BACKGROUND.

FONTS: WHEN POSSIBLE, THE SPECIFIED DWRLF DISPLAY FONT, HELVETICA LT CONDENSED BOLD (OR ANY HELVETICA CONDENSED BOLD) SHOULD BE USED, WITH THE PROJECT NAME ON PANTONE PROCESS BLUE AND ALL OTHER TYPE IN BLACK. TYPE SIZES CAN BE FOUND IN THE SPECIFICATIONS.

SEE SPECIFICATION FOR COLOR CHART.

C.J. SAVOIE
CONSULTING ENGINEERS, INC.
ENGINEERS
DESIGNERS
PLANNERS

UV DISINFECTION ASSEMBLY
FOR
LIONS WATER TREATMENT PLANT

PROJECT LOCATION
& VICINITY MAPS

ST. JOHN THE BAPTIST PARISH

DRAWN BY:	JKS
REVISED:	
APPROVED BY:	
JOB #:	S-84-125
DATE:	JAN., 2015
SCALE:	N.T.S.
SHEET NUMBER	G.2

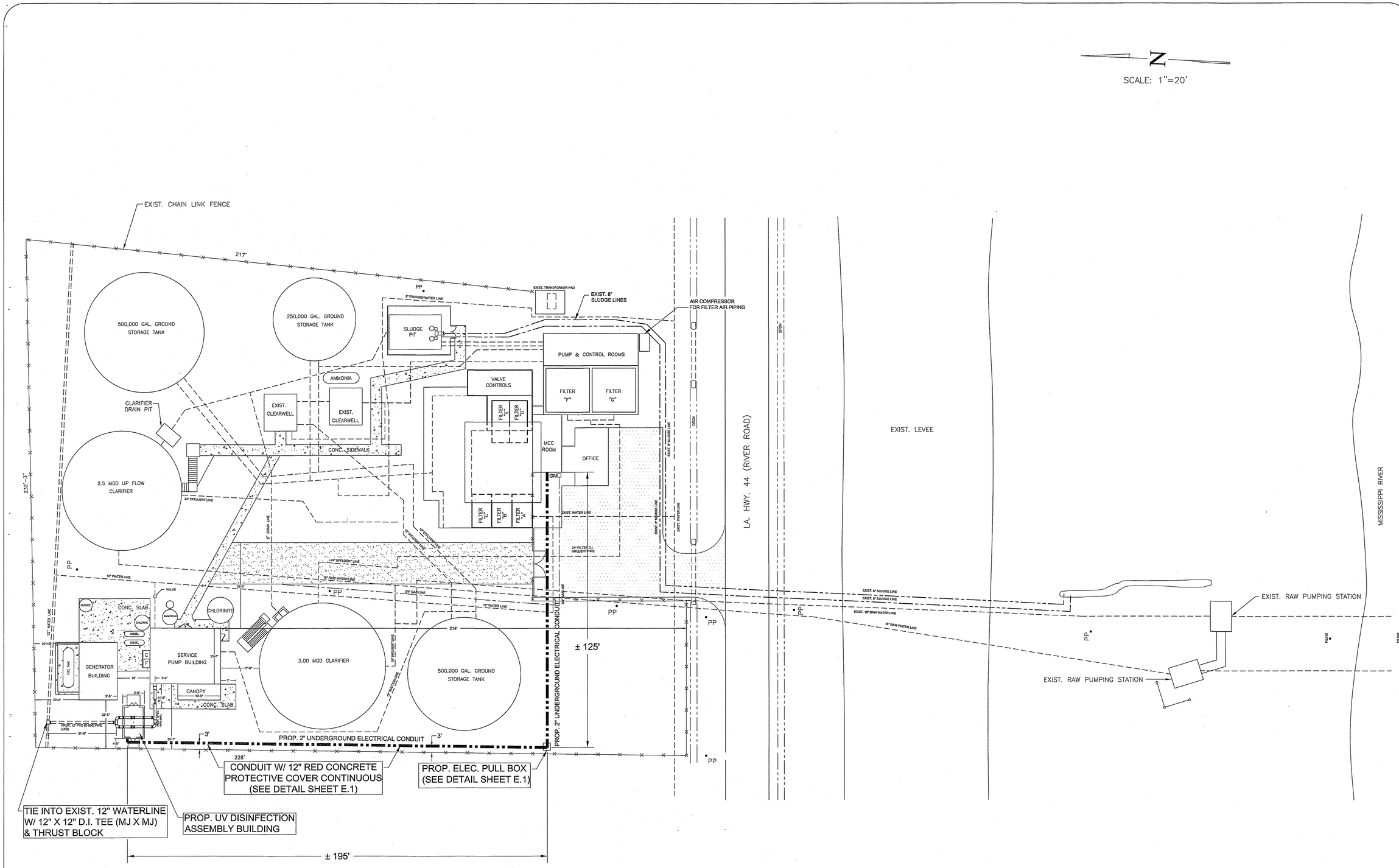

C.J. SAVOIE
CONSULTING ENGINEERS, INC.
ENGINEERS
DESIGNERS
PLANNERS

UV DISINFECTION ASSEMBLY FOR LIONS WATER TREATMENT PLANT

PROPOSED SITE PLAN

ST. JOHN THE BAPTIST PARISH

DRAWN BY:	JKS
REVISED:	
APPROVED BY:	
JOB #:	S-84-125
DATE:	JAN., 2015
SCALE:	1"=20'
SHEET NUMBER	C.1

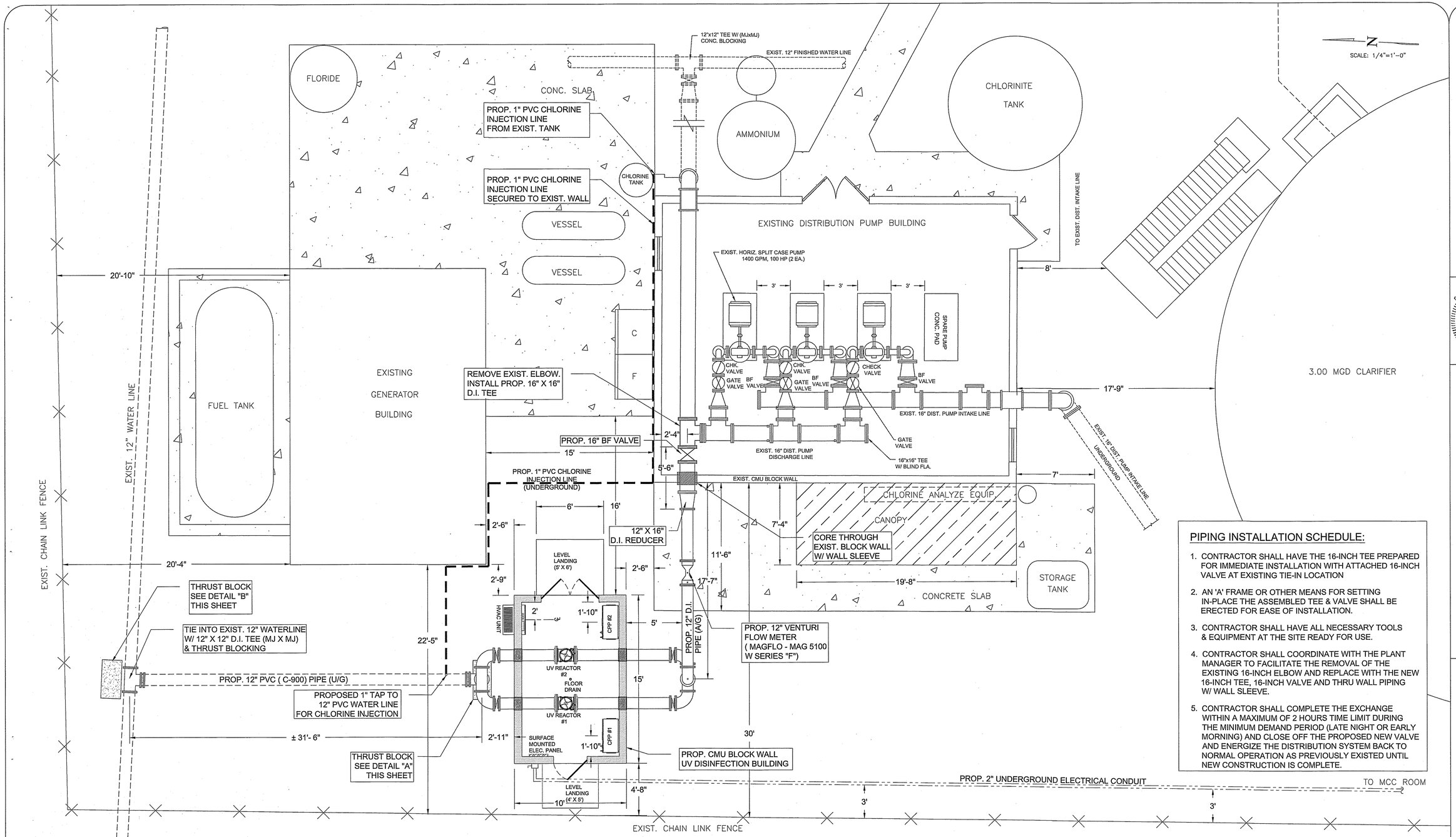

PIPING INSTALLATION SCHEDULE:

1. CONTRACTOR SHALL HAVE THE 16-INCH TEE PREPARED FOR IMMEDIATE INSTALLATION WITH ATTACHED 16-INCH VALVE AT EXISTING TIE-IN LOCATION
2. AN 'A' FRAME OR OTHER MEANS FOR SETTING IN-PLACE THE ASSEMBLED TEE & VALVE SHALL BE ERECTED FOR EASE OF INSTALLATION.
3. CONTRACTOR SHALL HAVE ALL NECESSARY TOOLS & EQUIPMENT AT THE SITE READY FOR USE.
4. CONTRACTOR SHALL COORDINATE WITH THE PLANT MANAGER TO FACILITATE THE REMOVAL OF THE EXISTING 16-INCH ELBOW AND REPLACE WITH THE NEW 16-INCH TEE, 16-INCH VALVE AND THRU WALL PIPING W/ WALL SLEEVE.
5. CONTRACTOR SHALL COMPLETE THE EXCHANGE WITHIN A MAXIMUM OF 2 HOURS TIME LIMIT DURING THE MINIMUM DEMAND PERIOD (LATE NIGHT OR EARLY MORNING) AND CLOSE OFF THE PROPOSED NEW VALVE AND ENERGIZE THE DISTRIBUTION SYSTEM BACK TO NORMAL OPERATION AS PREVIOUSLY EXISTED UNTIL NEW CONSTRUCTION IS COMPLETE.

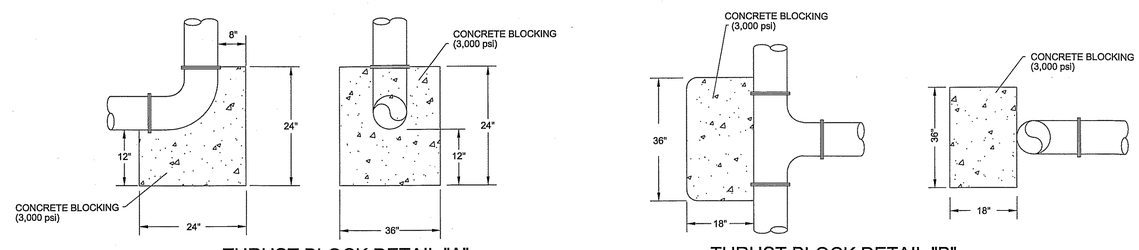

THRUST BLOCK DETAIL "A"

THRUST BLOCK DETAIL "B"

C.J. SAVOIE
CONSULTING ENGINEERS, INC.
ENGINEERS DESIGNERS PLANNERS

UV DISINFECTION ASSEMBLY
LIONS WATER TREATMENT PLANT

PROPOSED PLAN VIEW

ST. JOHN THE BAPTIST PARISH

DRAWN BY:	JKS
REVISED:	
APPROVED BY:	
JOB #:	S-84-125
DATE:	JAN., 2015
SCALE:	1/4"=1'-0"
SHEET NUMBER	C.2

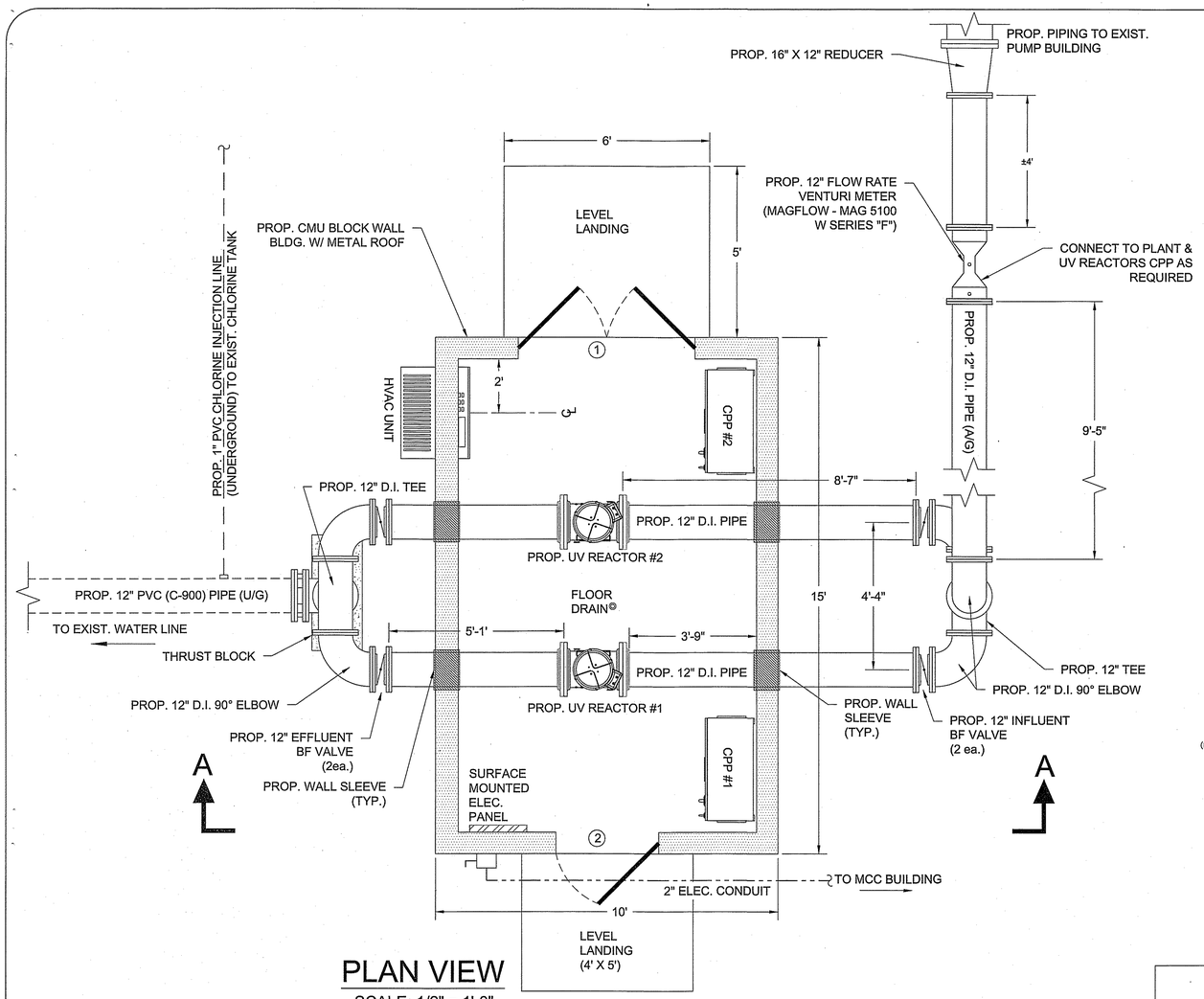

PLAN VIEW

SCALE: 1/2" = 1'-0"

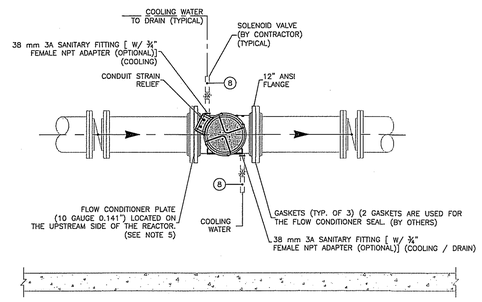

REACTOR FRONT VIEW

SCALE:N.T.S. REFER TO PLAN VIEW OF THIS SHEET FOR ORIENTATION
NOTE: CPP NOT SHOWN FOR CLARITY.

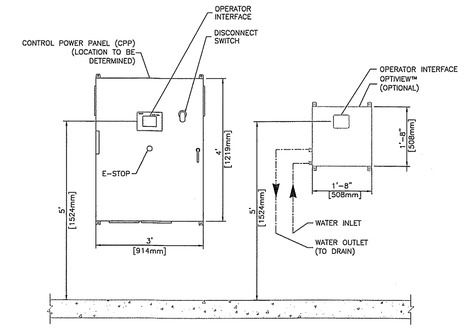

FRONT VIEW OF CPP

SCALE:N.T.S. REFER TO PLAN VIEW OF THIS SHEET FOR ORIENTATION

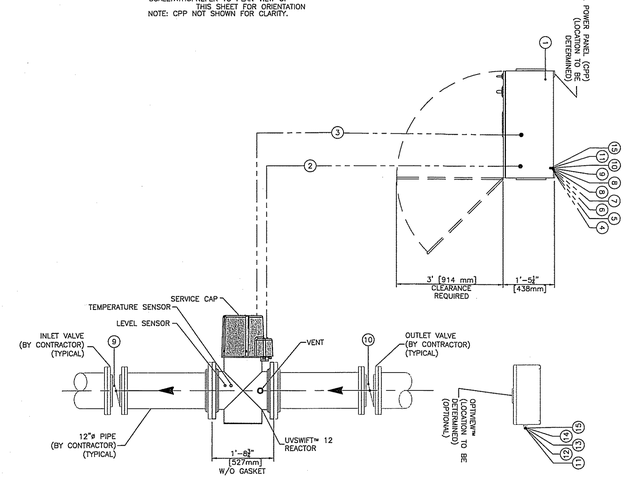

REACTOR PLAN VIEW

SCALE:N.T.S.REFER TO PLAN VIEW OF THIS SHEET FOR ORIENTATION

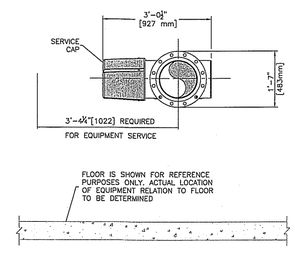

REACTOR SIDE VIEW

SCALE:N.T.S.REFER TO PLAN VIEW OF THIS SHEET FOR ORIENTATION
NOTE: SOLENOID VALVES (BY OTHERS) ARE NOT SHOWN FOR CLARITY.

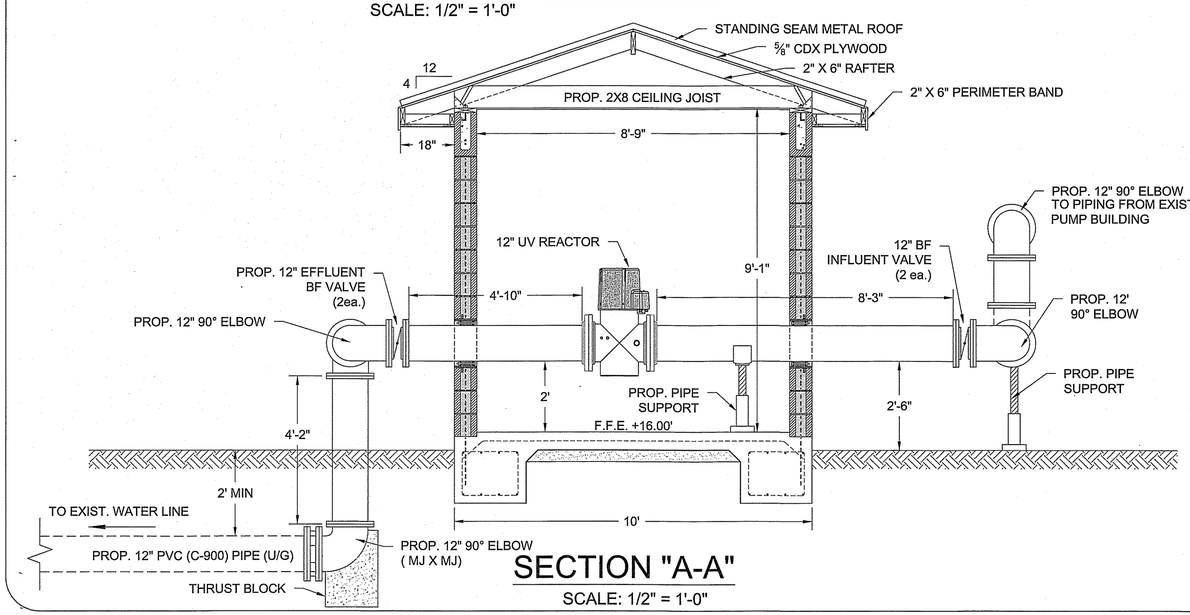

SECTION "A-A"

SCALE: 1/2" = 1'-0"

TROJAN UV SWIFT™ EQUIPMENT INTERCONNECTIONS

No.	DESCRIPTION	FROM	TO
1	CONTROL POWER PANEL (CPP) POWER SUPPLY 480Y/277V, 60Hz, 3 PHASE, 4 WIRE + GROUND OR 415Y/240V, 50Hz, 3 PHASE, 4 WIRE + GROUND OR 400Y/230V, 50Hz, 3 PHASE, 4 WIRE + GROUND OR 380Y/220V, 50Hz, 3 PHASE, 4 WIRE + GROUND OR 240Y/120V, 60Hz, 1 PHASE, 3 WIRE + GROUND OR 200Y/120V, 60Hz, 3 PHASE, 4 WIRE + GROUND OR 240V, 60Hz, 3 PHASE, 3 WIRE + GROUND (2L12=6.8, 4L12=13.5) VIA UNBALANCED LOAD ### AMPS MAXIMUM CURRENT / PHASE	DISTRIBUTION PANEL (DP) (BY OTHERS) (NOT SHOWN)	CPP OF PANEL (TOP)
2	REACTOR POWER SUPPLY (CONTAINED WITHIN CONDUIT) (CONDUIT AND CABLING PROVIDED BY TROJAN)	CPP (UNDERSIDE OF PANEL)	REACTOR
3	REACTOR CONTROLS (CONTAINED WITHIN CONDUIT) (CONDUIT AND CABLING PROVIDED BY TROJAN)	CPP (UNDERSIDE OF PANEL)	REACTOR
4	DISCRETE UV SYSTEM STATUS INFORMATION SYSTEM ON/OFF STATUS – 2 CONDUCTORS SYSTEM READY STATUS – 2 CONDUCTORS COMMON CRITICAL ALARM – 2 CONDUCTORS COMMON MAJOR ALARM – 2 CONDUCTORS COMMON MINOR ALARM – 2 CONDUCTORS REMOTE ON/OFF CONTROL – 2 CONDUCTORS	CPP	PLANT PLC (BY OTHERS) (NOT SHOWN)
5	FLOW METER 4–20mA DC ANALOG INPUT (ISOLATED) (BY OTHERS)	FLOW METER (BY OTHERS) (NOT SHOWN)	CPP (TOP OF PANEL)
6	UV INTENSITY 4–20mA DC ANALOG OUTPUT (OPTIONAL)	CPP	PLANT PLC (BY OTHERS) (NOT SHOWN)
7	DOSE DELIVERED 4–20mA ANALOG OUTPUT (OPTIONAL)	CPP	PLANT PLC (BY OTHERS) (NOT SHOWN)
8	DISCRETE COOLING WATER VALVE OPEN CONTROL OUTPUT (OPTIONAL) – 2 CONDUCTORS DISCRETE COOLING WATER VALVE CLOSE CONTROL OUTPUT (OPTIONAL) – 2 CONDUCTORS DISCRETE COOLING WATER VALVE OPEN STATUS INPUT (OPTIONAL) – 2 CONDUCTORS DISCRETE COOLING WATER VALVE CLOSE STATUS INPUT (OPTIONAL) – 2 CONDUCTORS DISCRETE COOLING WATER VALVE LOCAL/REMOTE MODE INPUT (OPTIONAL) – 2 CONDUCTORS	CPP CPP COOLING VALVE (BY OTHERS) COOLING VALVE (BY OTHERS) COOLING VALVE (BY OTHERS)	COOLING VALVE (BY OTHERS) COOLING VALVE (BY OTHERS) CPP CPP CPP
9	DISCRETE INLET VALVE OPEN CONTROL OUTPUT (OPTIONAL) – 2 CONDUCTORS DISCRETE INLET VALVE CLOSE CONTROL OUTPUT (OPTIONAL) – 2 CONDUCTORS DISCRETE INLET VALVE OPEN STATUS INPUT (OPTIONAL) – 2 CONDUCTORS DISCRETE INLET VALVE CLOSE STATUS INPUT (OPTIONAL) – 2 CONDUCTORS DISCRETE INLET VALVE LOCAL/REMOTE MODE INPUT (OPTIONAL) – 2 CONDUCTORS	CPP CPP INLET VALVE (BY OTHERS) INLET VALVE (BY OTHERS) INLET VALVE (BY OTHERS)	INLET VALVE (BY OTHERS) INLET VALVE (BY OTHERS) CPP CPP CPP
10	DISCRETE OUTLET VALVE OPEN CONTROL OUTPUT (OPTIONAL) – 2 CONDUCTORS DISCRETE OUTLET VALVE CLOSE CONTROL OUTPUT (OPTIONAL) – 2 CONDUCTORS DISCRETE OUTLET VALVE OPEN STATUS INPUT (OPTIONAL) – 2 CONDUCTORS DISCRETE OUTLET VALVE CLOSE STATUS INPUT (OPTIONAL) – 2 CONDUCTORS DISCRETE OUTLET VALVE LOCAL/REMOTE MODE INPUT (OPTIONAL) – 2 CONDUCTORS	CPP CPP OUTLET VALVE (BY OTHERS) OUTLET VALVE (BY OTHERS) OUTLET VALVE (BY OTHERS)	OUTLET VALVE (BY OTHERS) OUTLET VALVE (BY OTHERS) CPP CPP CPP
11	OPTIVIEW™ (OPTIONAL) 4–20mA ANALOG INPUT (ISOLATED)	OPTIVIEW™	CPP
12	OPTIVIEW™ (OPTIONAL) POWER SUPPLY 120V, 1 PHASE, 2 WIRE + GROUND, 250VA	DP (BY OTHERS) (NOT SHOWN)	OPTIVIEW™
13	WATER SUPPLY TO OPTIVIEW™ (INLET) (OPTIONAL) (SEE SPECS ON UNIT FOR REQUIRED FLOW RATE AND LINE SIZE)	(BY OTHERS) (NOT SHOWN)	OPTIVIEW™ INLET
14	OPTIVIEW™ TO DRAIN (OUTLET) (OPTIONAL) (SEE SPECS ON UNIT FOR REQUIRED DRAIN SIZE)	OPTIVIEW™ OUTLET	(BY OTHERS) (NOT SHOWN)
15	UV TRANSMITTANCE METER ALARM (OPTIONAL) (DISCRETE INPUT	OPTIVIEW™	CPP (TOP OF PANEL)

REACTOR NOTES:

1. CHAMBER MATERIAL TO BE TYPE 316L STAINLESS STEEL.
2. MAXIMUM OPERATING PRESSURE TO BE 150 PSI (10 BAR).
3. TROJAN RECOMMENDS THAT VALVES ARE USED TO ISOLATE THE REACTOR FROM PLANT FLOW FOR SERVICING. ALL VALVES ARE TO BE SUPPLIED BY OTHERS.
4. #L12 REACTOR WEIGHT: DRY 136kg (300lbs) WET 195 kg (430lbs)

CONTROL POWER PANEL (CPP) NOTES:

1. CONTROL POWER PANEL TO BE E-COAT POWDER COATED RAL7035 (LIGHT GREY) OR SIMILAR. MATERIAL IS TO BE MILD STEEL, NEMA 12, VENTILATED.
2. PANEL IS TO BE WALL MOUNTED.
3. MAXIMUM CABLING DISTANCE BETWEEN CONTROL POWER PANEL AND REACTOR SHALL BE NO GREATER THAN 6.1m(20') OR 12.2m(40'), OR 18.3(60'), AND WILL BE SUPPLIED WITH THE SYSTEM.
4. PANEL WEIGHT #L12 = 136kg (300lbs)

NOTES:

: ANCHOR BOLTS ARE NOT SUPPLIED BY TROJAN TECHNOLOGIES.
: SYSTEM CONDUIT, WIRING, DISTRIBUTION PANELS & INTERCONNECTIONS BY OTHERS.
: ELECTRICAL REQUIREMENTS SHOWN ARE TO SUPPLY TROJAN UV EQUIPMENT ONLY. ELECTRICAL INRUSH FACTOR TO BE ADDED AS PER LOCAL CODE.
: CONTRACTOR TO REVIEW ALL TROJAN TECHNOLOGIES INSTALLATION INSTRUCTIONS PRIOR TO EQUIPMENT INSTALLATION.

UV REACTORS SHALL BE BY TROJAN UV SWIFT EQUIPMENT INTERCONNECTIONS OR PRIOR APPROVED EQUAL.

DOOR & WINDOW SCHEDULE

	DESCRIPTION	FINISH
1	3'-0" X 7'-0" DOUBLE MTL. H/C DOOR W/ HALF LITE PANEL & ADA APPROVED LEVERS, LOCKS & CLOSER W/ PANIC PUSH BAR & WEATHER STRIPPING	PAINTED
2	3'-0" X 7'-0" SINGLE MTL. H/C DOOR W/ HALF LITE PANEL & ADA APPROVED LEVERS, LOCKS & CLOSER W/ PANIC PUSH BAR & WEATHER STRIPPING	PAINTED

C.J. SAVOIE
CONSULTING ENGINEERS, INC.
ENGINEERS DESIGNERS PLANNERS

STATE OF LOUISIANA
CHARLES J. SAVOIE, III
LICENSED PROFESSIONAL ENGINEER
CIVIL
12-29-14

UV DISINFECTION ASSEMBLY
LIONS WATER TREATMENT PLANT

UV DISINFECTION PLAN & DETAILS
ST. JOHN THE BAPTIST PARISH

DRAWN BY: JKS
REVISED:
APPROVED BY:
JOB #: S-84-125
DATE: JAN., 2015
SCALE: AS SHOWN
SHEET NUMBER
C.3

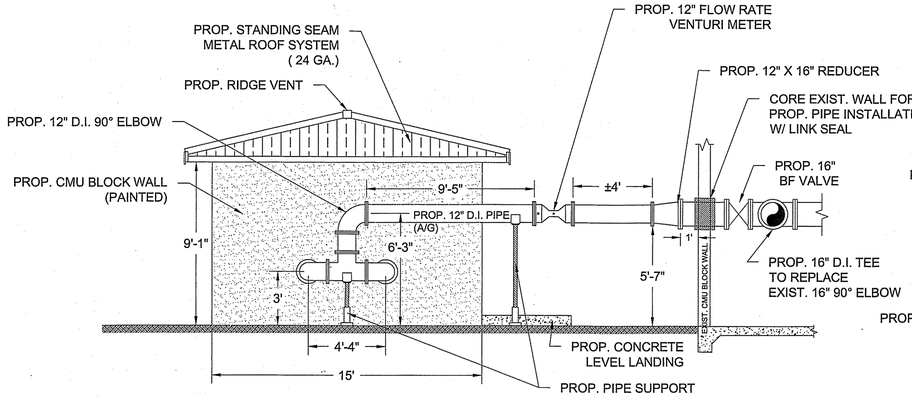

LEFT SIDE ELEVATION

SCALE: ¼" = 1'-0"

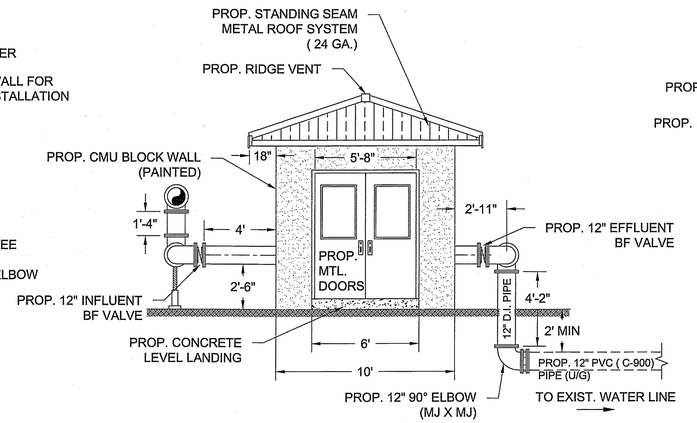

FRONT SIDE ELEVATION

SCALE: 1/4"=1'-0"

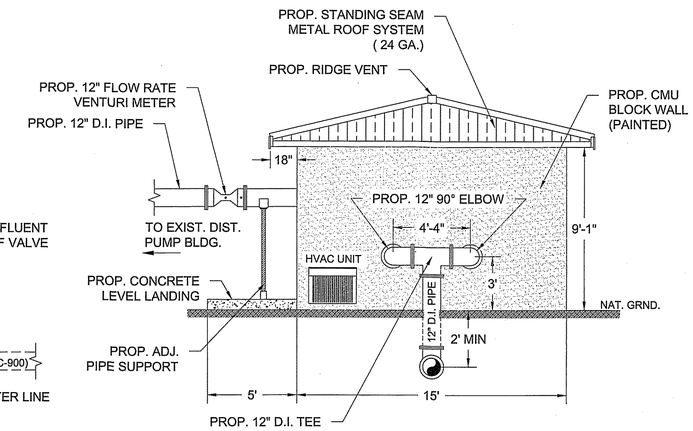

RIGHT SIDE ELEVATION

SCALE: ¼" = 1'-0"

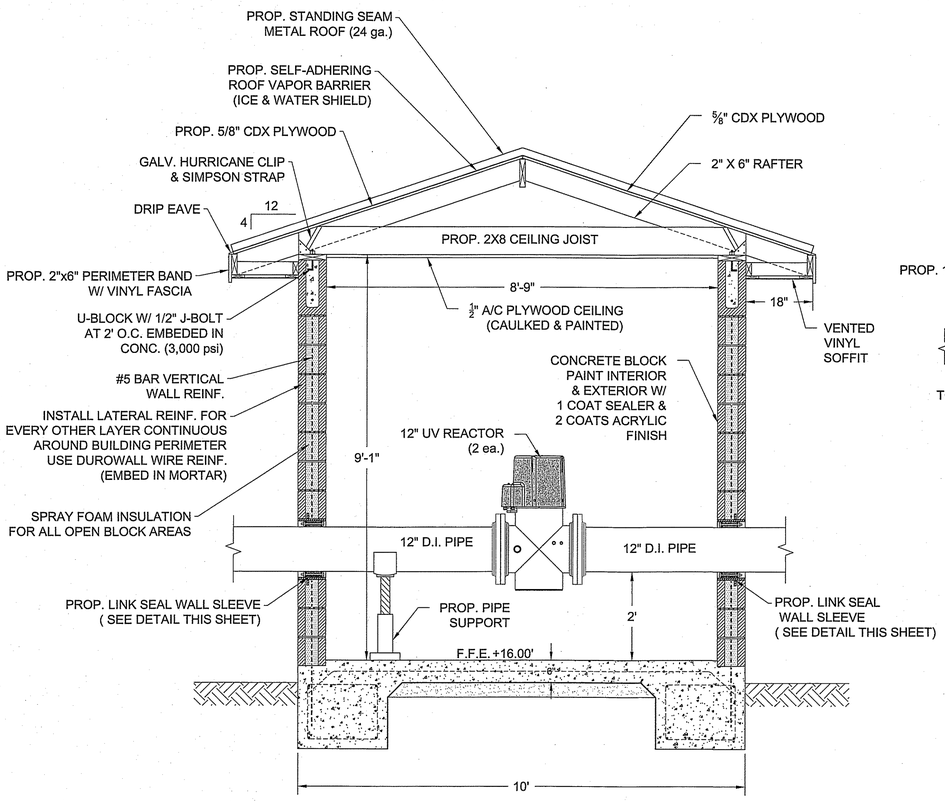

BUILDING SECTION VIEW

SCALE: NTS

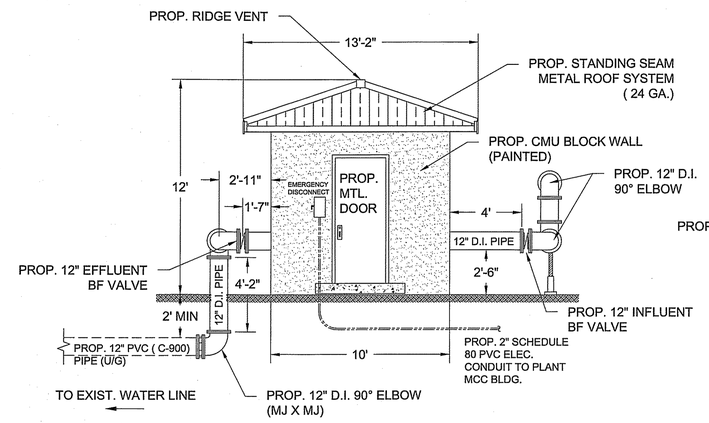

REAR SIDE ELEVATION

SCALE: 1/4"=1'-0"

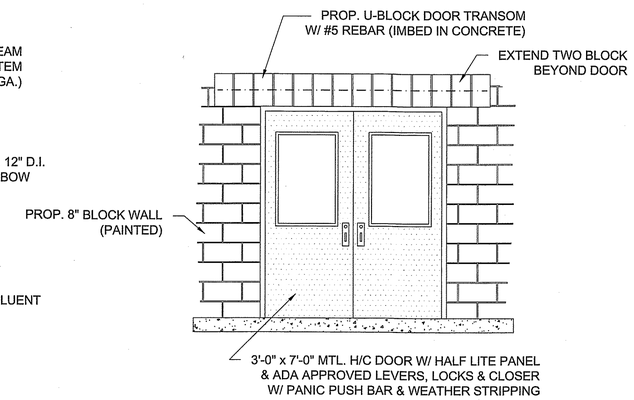

DOORWAY DETAIL

N.T.S

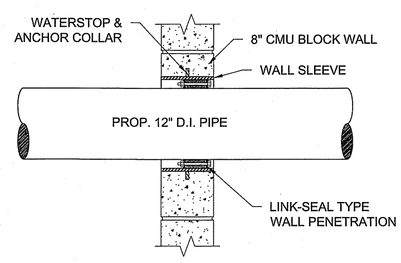

WALL SLEEVE DETAIL

SCALE: NTS

NOTE: CONTRACTOR TO PLACE RETRAINER GLANDS AT ALL BENDS AND TEES AND ALL OTHER LOCATIONS REQUIRED BY AWWA AND ANSI CODES.

DESIGN DATA
LOWEST FIRST FLOOR FINISHED ELEVATION " +16.00'
FLOOD ZONE "AE" - FLOOD INSURANCE RATE MAP PANEL 215 OF 325
WIND SPEED : 100-110 MPH - ACCORDING TO LSUCC 3 SECOND GUST = 117 MPH
WIND IMPORTANCE FACTOR = 1.15
WIND EXPOSURE : CATEGORY B / IBC TABLE 1609.4.3
FIRST FLOOR LIVE LOAD : 150 LBS/ SF
ROOF LIVE LOAD : 20 PSF
OCCUPANCY CATEGORY : CATEGORY 3 / IBC TABLE 1604.5
LOCATION : ST. JOHN THE BAPTIST PARISH - ZIP CODE 70084
ALL CONSTRUCTION TO BE IN ACCORDANCE WITH IBC CODES. DESIGN LOADS SHALL BE IN ACCORDANCE WITH IBC SECTION 1603 AND ASCE 7
NOTE: SEE BUILDING SPECIFICATIONS FOR ALL ADDITIONAL DESIGN INFORMATION.

GENERAL NOTES:

BUILDING CONTRACTOR IS TO BE RESPONSIBLE FOR VERIFYING ALL BUILDING COMPONENTS AND ESTABLISHING CONSTRUCTION TECHNIQUES & PRACTICES TO UP HOLD STRUCTURAL INTEGRITY.

BUILDING CONTRACTOR IS RESPONSIBLE FOR MEETING ALL REQUIRED BUILDING CODES AND REGULATIONS OF BUILDING SITE AND OBTAIN BUILDING PERMITS.

CONTRACTOR TO INSTALL FLOOR DRAIN IN PROPOSED BUILDING.

PLUMBING CONTRACTOR IS TO BE RESPONSIBLE FOR MEETING ALL LOCAL AS WELL AS THE NATIONAL PLUMBING CODES.

ELECTRICAL CONTRACTOR IS TO BE RESPONSIBLE FOR DETERMINING THE QUANTITY AND CORRECT SIZE OF ALL CIRCUITS AS WELL AS OTHER ELECTRICAL COMPONENTS. ALL ELECTRICAL WORK IS TO MEET ALL LOCAL AS WELL AS THE NATIONAL ELECTRICAL CODES.

C.J. SAVOIE
CONSULTING ENGINEERS, INC.
ENGINEERS DESIGNERS PLANNERS

UV DISINFECTION ASSEMBLY
LIONS WATER TREATMENT PLANT

BUILDING ELEVATIONS & SECTION PLAN

ST. JOHN THE BAPTIST PARISH

DRAWN BY:	JKS
REVISED:	
APPROVED BY:	
JOB #:	S-84-125
DATE:	JAN., 2015
SCALE:	AS SHOWN
SHEET NUMBER	A.1

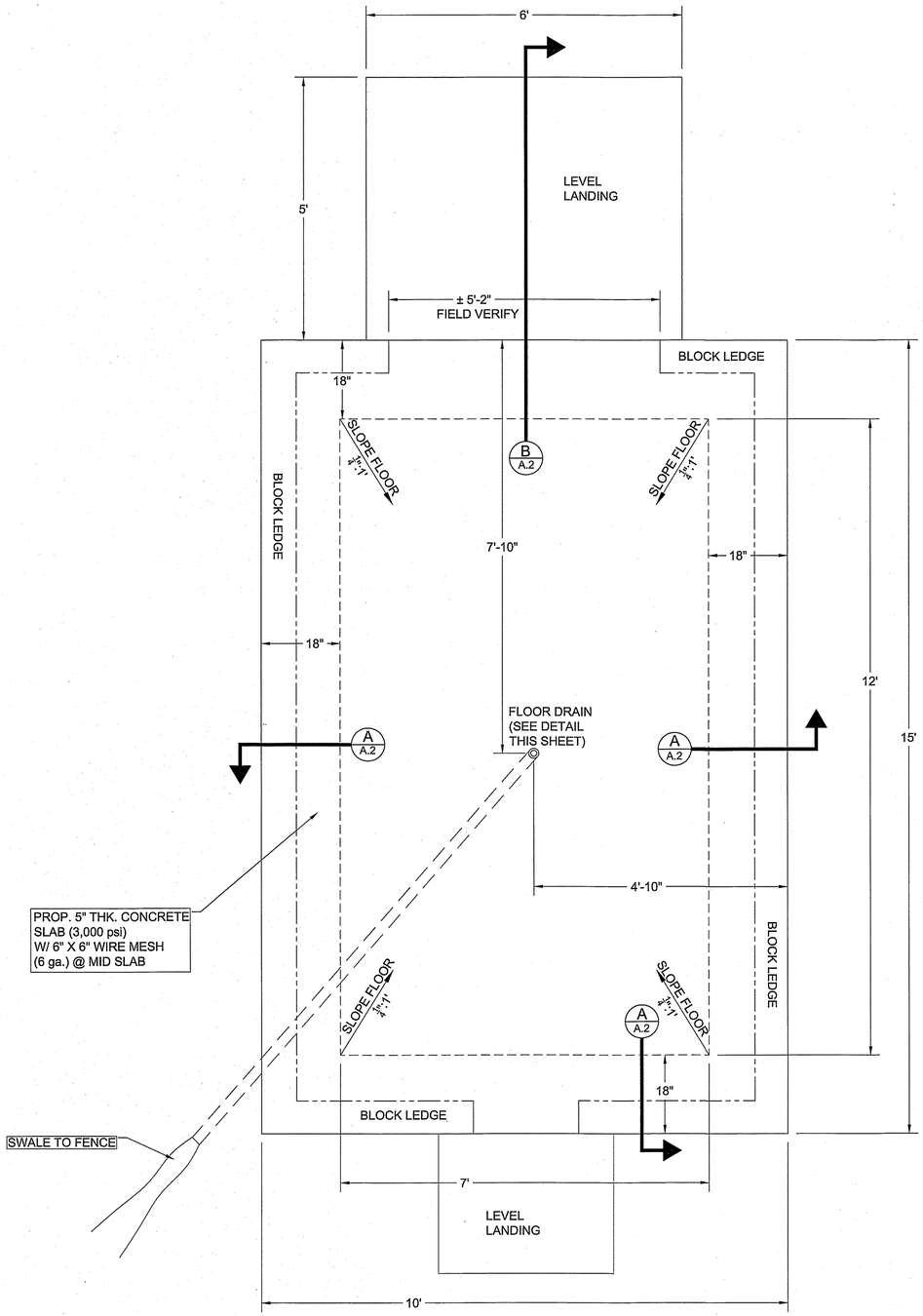

PROPOSED FOUNDATION PLAN AND DETAILS

SCALE: 3/8"=1'-0"

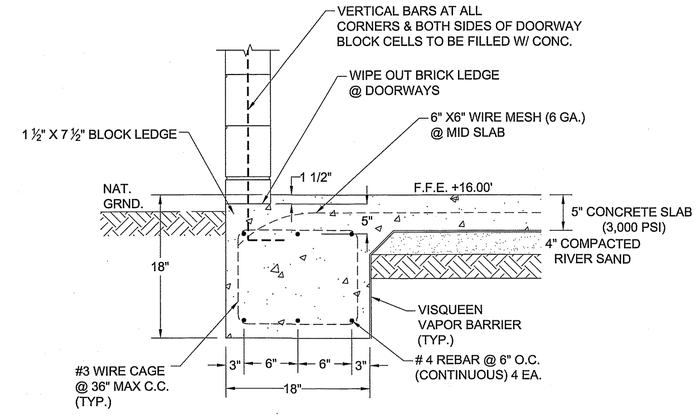

A A.2 SECTION "A"

SCALE: 1"=1'-0"

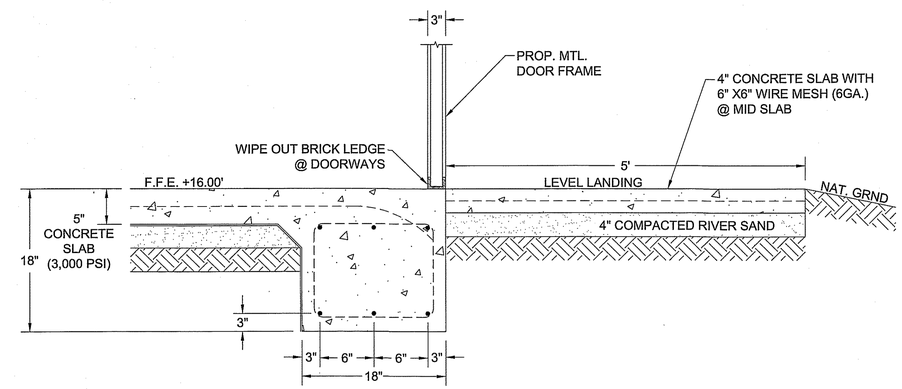

B A.2 SECTION "B"

SCALE: 1"=1'-0"

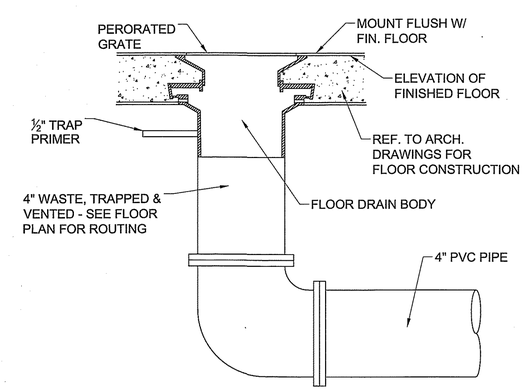

FLOOR DRAIN DETAIL

SCALE: NTS

C.J. SAVOIE
CONSULTING ENGINEERS, INC.
ENGINEERS DESIGNERS PLANNERS

UV DISINFECTION ASSEMBLY
LIONS WATER TREATMENT PLANT

BUILDING FOUNDATION PLANS & DETAILS

ST. JOHN THE BAPTIST PARISH

DRAWN BY:	JKS
REVISED:	
APPROVED BY:	
JOB #:	S-84-125
DATE:	JAN., 2015
SCALE:	AS SHOWN
SHEET NUMBER	A.2

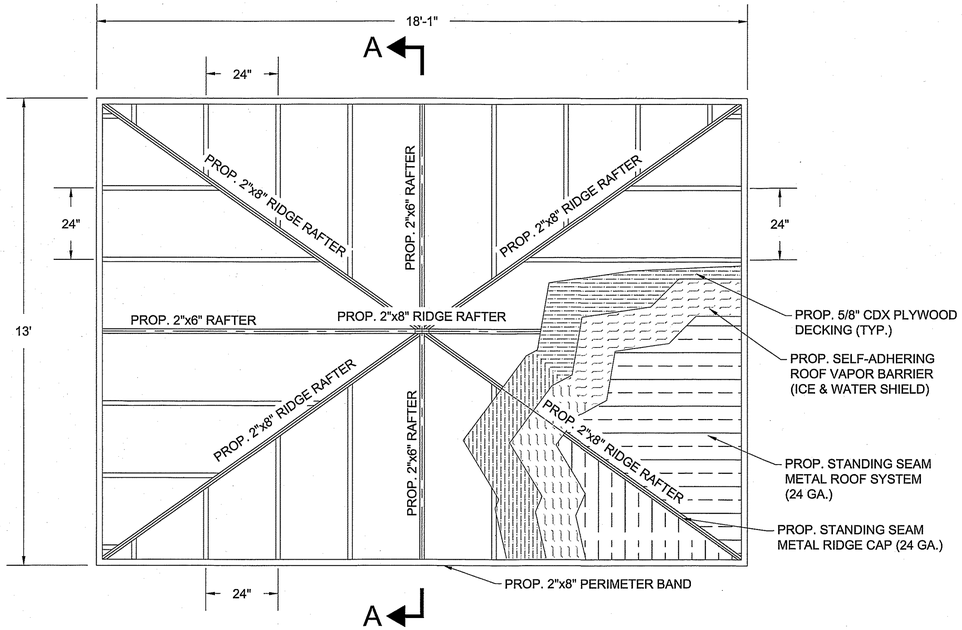

PROPOSED ROOF PLAN

SCALE: ¼" = 1'-0"

TYPICAL FRAMING NOTES:

1. ALL ROOF FRAMING SHALL MEET STANDARD BUILDING CODES & LOCAL BUILDING CODES (WOOD CONSTRUCTION, CHAPTER 17.)
2. DRAWINGS DO NOT SHOW ALL FRAMING CONDITIONS. CONTRACTOR SHALL FRAME STRUCTURE TO MEET ALL REQUIREMENTS BY BUILDING INSPECTOR, BUILDING CODES AND ENGINEER.
3. ALL VERTICAL BRACING (FOR VALLEY AND RIDGE BEAMS) WITH A LENGTH OVER 7'-0" SHALL BE DOUBLE.
4. ALL RAFTERS & CEILING JOISTS SHALL BE NO. 2 SOUTHERN YELLOW PINE, SIZED AND SPACED AS CALLED FOR ON DRAWINGS. PROVIDE BRACING AT 8'-O" ON CENTER MAXIMUM SPACING FOR CEILING JOISTS.
5. ROOF SHEATHING TO BE 5/8"THICK CDX PLYWOOD. PLYWOOD SHALL BE INSTALLED WITH METAL CLIPS AS PER MANUFACTURERS RECOMMENDATIONS.
6. PROVIDE METAL JOIST HANGERS AT JOISTS FRAMING INTO FLUSH BEAMS. PROVIDE DOUBLE OR TRIPLE STUDS UNDER ALL BEAMS AS REQUIRED TO GIVE A MINIMUM BEARING OF 3 1/2". PROVIDE ALL BLOCKING AS REQUIRED TO GUARANTEE SOLID NAILING OF CONCRETE BOARD, TRIM, FACING, ETC.

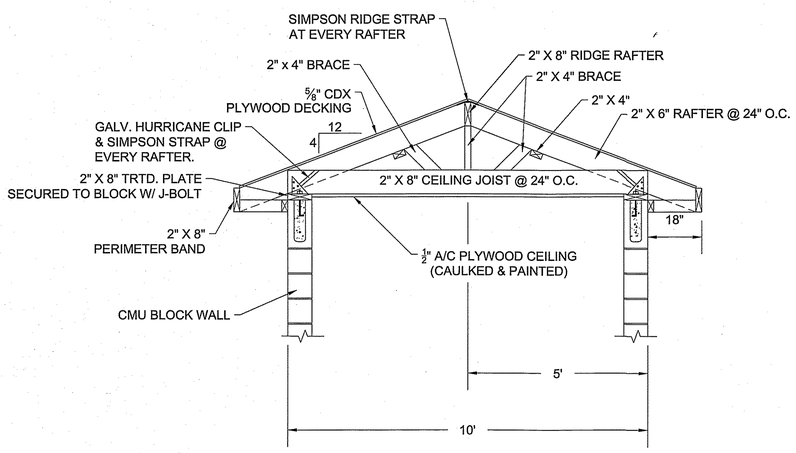

RAFTER DETAIL-SECTION "A-A"

SCALE: ¼" = 1'-0"

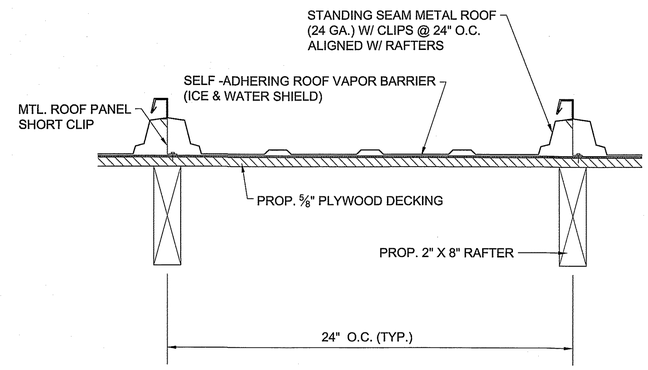

ROOF PANEL DETAIL

N.T.S.

C.J. SAVOE
CONSULTING ENGINEERS, INC.
ENGINEERS DESIGNERS PLANNERS

UV DISINFECTION ASSEMBLY

LIONS WATER TREATMENT PLANT

BUILDING ROOF PLAN & DETAILS

ST. JOHN THE BAPTIST PARISH

DRAWN BY:	JKS
REVISED:	
APPROVED BY:	
JOB #:	S-84-125
DATE:	JAN., 2015
SCALE:	1/4"=1'-0"
SHEET NUMBER	A.3

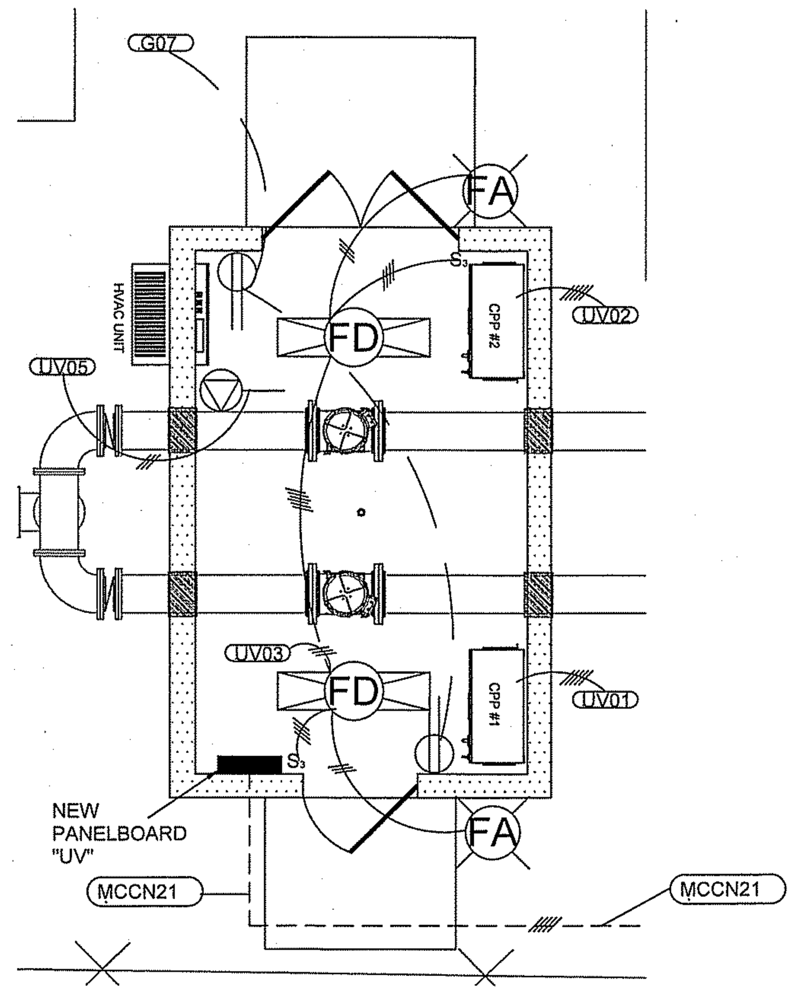

4 ESITE UV BUILDING ELECTRICAL 1/4"

CONDUIT, PANELBOARD, MCC, AND SAFETY SWITCH SCHEDULE

CONDUIT			CONDUCTOR				PANELBOARD SCHEDULE				SAFETY SWITCH/STARTER SCHEDULE				CONNECTED LOAD IN VOLT*AMPERES							VOLTAGE		PHASE CURRENTS			TOTAL
						EXISTING 277/480 MOTOR CONTROL CENTER "N" (MCCN)																					
MCCN1	2 1/2"	EMT	4#4/0,1#3GND/#2/0 QUADRAPLEX OVERHAEAD	THWN	MCCN	225 AMP CB RAW WATER MCC1,MCC2 MAIN BREAKERS	MCCN-1FB	CB1	3P-225	A-B-C								10000			122694	277	480	168.4	168.4	147.6	132694
MCCN2	2 1/2"	RMC/RNC/RMC	3#2/0,1#6GND	THWN	MCCN	SS-1/HIGH SERVICE PUMP A 100 HP VFD	MCCN-3FA	VFD	MCP	A-B-C	SS-1	3P-200	NONE	1							98793	277	480	118.8	118.8	118.8	98793
MCCN3	2 1/2"	RMC/RNC/RMC	3#2/0,1#6GND	THWN	MCCN	SS-2/HIGH SERVICE PUMP B 100 HP VFD	MCCN-4FA	VFD	MCP	A-B-C	SS-2	3P-200	NONE	1							98793	277	480	118.8	118.8	118.8	98793
MCCN4	2 1/2"	RMC/RNC/RMC	3#2/0,1#6GND	THWN	MCCN	SS-3/HIGH SERVICE PUMP C 100 HP VFD	MCCN-6FA	VFD	MCP	A-B-C	SS-3	3P-200	NONE	1							98793	277	480	118.8	118.8	118.8	98793
MCCN5	3/4"	RMC/RNC/RMC	3#8,1#10GND	THWN	MCCN	SS-4/2.5 MGD CLARIFIER 10 HP FVNR	MCCN-7FE	SIZE 1	MCP	A-B-C	SS-4	3P-30	NONE	3R							11154	277	480	13.4	13.4	13.4	11154
MCCN6	3/4"	RMC/RNC/RMC	3#10,1#10GND	THWN	MCCN	SS-5/3.0 MGD CLARIFIER 7.5 HP FVNR	MCCN-7FD	SIZE 1	MCP	A-B-C	SS-5	3P-30	NONE	3R							8763	277	480	10.5	10.5	10.5	8763
MCCN8	1 1/4"	RMC	3#4,1#6GND	THWN	MCCN	40 HP BACK WASH PUMP	MCCN-1FC	SIZE 3	MCP	A-B-C	SS-6	3P-30	NONE	3R							41429	277	480	49.8	49.8	49.8	41429
MCCN9	1 1/4"	RMC	3#6,1#6GND	THWN	MCCN	40 HP ROOTS BLOWER	MCCN-2FB	SIZE 3	MCP	A-B-C	SS-8	3P-60	NONE	1							41429	277	480	49.8	49.8	49.8	41429
MCCN10	3/4"	RMC	3#8,1#8GND	THWN	MCCN	20 HP BACKWASH PUMP	MCCN-7FF	SIZE 2	MCP	A-B-C	SS-9	3P-60	NONE	1							21511	277	480	25.9	25.9	25.9	21511
MCCN12	2"	RMC/RNC/RMC	3#3,1#6GND	THWN	MCCN	SS-11/60 HP CLEAR WELL PUMP	MCCN-9FB	SIZE 4	MCP	A-B-C	SS-11	3P-100	NONE	3R							61347	277	480	73.8	73.8	73.8	61347
MCCN13	1 1/2"	EMT/FMC	3-#3,1#4GND	THWN	MCCN	75 KVA TRANSFORMER "N" PRIMARY	MCCN-7FB	CB3	3P-100	A-B-C	SS-17	3P-100	NONE	1							75000	277	480	90.2	90.2	90.2	75000
MCCN14	3/4"	RMC	3#12,1#12GND	THWN	MCCN	AIR COMPRESSOR 1 1/2 HP	MCCN-7FC	SIZE 1	3P-30	A-B-C	SS-12	3P-30	NONE	3R							2071	277	480	2.5	2.5	2.5	2071
						FUTURE POWER FACTOR CORRECTION	MCCN-2FD	CB2	3P-225	A-B-C												277	480	0	0.0	0.0	0
MCCN16	2"	RMC/RNC/RMC	3#3,1#6GND	THWN	MCCN	SS-13/50 HP CLEAR WELL PUMP	MCCN-9FA	SIZE 4	MCP	A-B-C	SS-13	3P-100	NONE	3R							51786	277	480	62.3	62.3	62.3	51786
MCCN17	1 1/2"	RMC/RNC/RMC	3#6,1#8GND	THWN	MCCN	SS-14/40 HP SLUDGE PUMP	MCCN-1FD	SIZE 3	MCP	A-B-C	SS-14	3P-60	NONE	3R							41429	277	480	49.8	49.8	49.8	41429
MCCN18	1 1/2"	RMC/RNC/RMC	3#6,1#8GND	THWN	MCCN	SS-15/40 HP SLUDGE PUMP	MCCN-2FC	SIZE 3	MCP	A-B-C	SS-15	3P-60	NONE	3R							41429	277	480	49.8	49.8	49.8	41429
MCCN19	3/4"	RMC	2#10,1#10GND	THWN	MCCN	SS-16/EXISTING TRANSFORMER "T1" PRIMARY	MCCN-7FA	CB3	2P-30	A-B	SS-16	2P-25	NONE	1				10000				277	480	20.8	20.8	0.0	10000
	2"	SCH80PVC					MCCN-9FC	SIZE 3	MCP	A-B-C																	
MCCN21	2"	SCH80PVC	4#2,1#4GND	THWN	MCCN	UV BUILDING PANELBAORD "UV" MAIN BREAKER	MCCN-8FC	CB4	NEW 3P-100	A-B-C					3650	3450	3324	0	0	0	20700	277	480	38.1	37.4	36.9	31124
											TOTAL CONNECTED LOAD "MCCN"				3650	3450	3324	20000	0	0	837121	277	480	1061.8	1,061.1	1,018.9	867545
						NEW 277/480/3/60 PANELBOARD "UV"																					
UV01	1"	EMT	4#8,1#8GND	THWN	UV	UV LIGHT CONTROLLER # 1	UV	1,3,5	3P-35	A-B-C					3450						10350	277	480	24.9	12.4	12.4	13800
UV02	1"	EMT	4#8,1#8GND	THWN	UV	UV LIGHT CONTROLLER # 2	UV	2,4,6	3P-35	A-B-C						3450					10350	277	480	12.4	24.9	12.4	13800
UV03	1/2"	EMT	2#12,1#12GND	THWN	UV	UV BUILDING LIGHTING	UV	7	1P-15	A					200							277	480	0.7	0.0	0.0	200
							UV	9	1P-20	B												277	480	0	0.0	0.0	0
UV05	1/2"	EMT	2#12,1#12GND	THWN	UV	UV BUILDING HVAC OUTLET	UV	11	1P-15	C							3324					277	480	0	0.0	12.0	3324
							UV	8,10,12	1P-20,1P-20,1P-20	A-B-C												277	480	0	0.0	0.0	0
											TOTAL CONNECTED LOAD PANELBOARD "UV"				3650	3450	3324	0	0	0	20700	277	480	38.1	37.4	36.9	31124
						EXISTING 120/208/3/60 PANELBOARD "PNL-G"																					
G01	1/2"	RMC	2#12,1#12GND	THWN	PNL-G	LIGHTING	PNL-G	1	1P-20	A					788							120	208	6.6	0.0	0.0	788
G02	1/2"	RMC	2#12,1#12GND	THWN	PNL-G	RECEPTACLE	PNL-G	3	1P-20	B						180						120	208	0	1.5	0.0	180
G03	1/2"	RMC	2#12,1#12GND	THWN	PNL-G	RECEPTACLE	PNL-G	5	1P-20	C							180					120	208	0	0.0	1.5	180
G04	3/4"	RMC	2#10,1#10GND	THWN	PNL-G	GENERATOR HEATER	PNL-G	2,4	2P-25	A,B								3500				120	208	16.8	16.8	0.0	3500
G05	3/4"	RMC	2#10,1#10GND	THWN	PNL-G	GENERATOR WATER JACKET HEATER	PNL-G	6	1P-20	A												120	208	0	0.0	0.0	0
							PNL-G	8,10	2P-25	B,C												120	208	0	0.0	0.0	0
G07	3/4"	SCH80PVC	2#10,1#10GND	THWN	PNL-G	UV BUILDING RECEPTACLES	PNL-G	12	1P-20	C							360					120	208	0	0.0	3.0	360
							PNL-G	7,9,11	3P-30 PROVISION	A,B,C												120	208	0	0.0	0.0	0
											TOTAL CONNECTED LOAD PNL-G				788	180	540	3500	0	0	0	120	208	23.4	18.3	4.5	5008

DENOTES EXISTING
DENOTES NEW

EXISTING MCCN

SECTION 1F	SECTION 2F	SECTION 3F	SECTION 4F	SECTION 5F	SECTION 6F	SECTION 7F	SECTION 8F	SECTION 9F
INC. POWER BLANK 225 A. BRKR. R.W. MCCS FVNR 40 HP B.W.P. FVNR 50 HP XFR.P.	INC. POWER FVNR 20 HP B.W.P. FVNR 20 HP SLDG. P FVNR 40 HP XFR. P. 225 A. BRKR. P.F. CORECT.	100 HP VFD HIGH SERVICE PUMP # 1	100 HP VFD HIGH SERVICE PUMP # 2	BLANK INSIDE CORNER SECTION	100 HP VFD HIGH SERVICE PUMP # 3	BLANK 100 AMP M.B. XMR - N FVNR 1.5 HP AIR CMP FVNR 7.5 HP CLFR 2 FVNR 10 HP CLFR 1 FVNR 20 HP SLDG. P	RAW WATER PUMP CTRLS NEW 3P-100 BLANK BLANK BLANK	50 HP XFER PUMP 60 HP XFER PUMP FVNR 40 HP

ADD A NEW 3P-100 BRANCH BREAKER TO SECTION 8F FOR POWER TO THE NEW PANELBOARD "UV".

3 ESITE MCC LAYOUT NONE

LUMINAIRE SCHEDULE	
SYMBOL	DESCRIPTION
FD	LITHONIA STL 4 40L MVOLT LP 835 OR EQUAL
FA	LITHONIA VG02C 2SLED MVOLT PE OR EQUAL

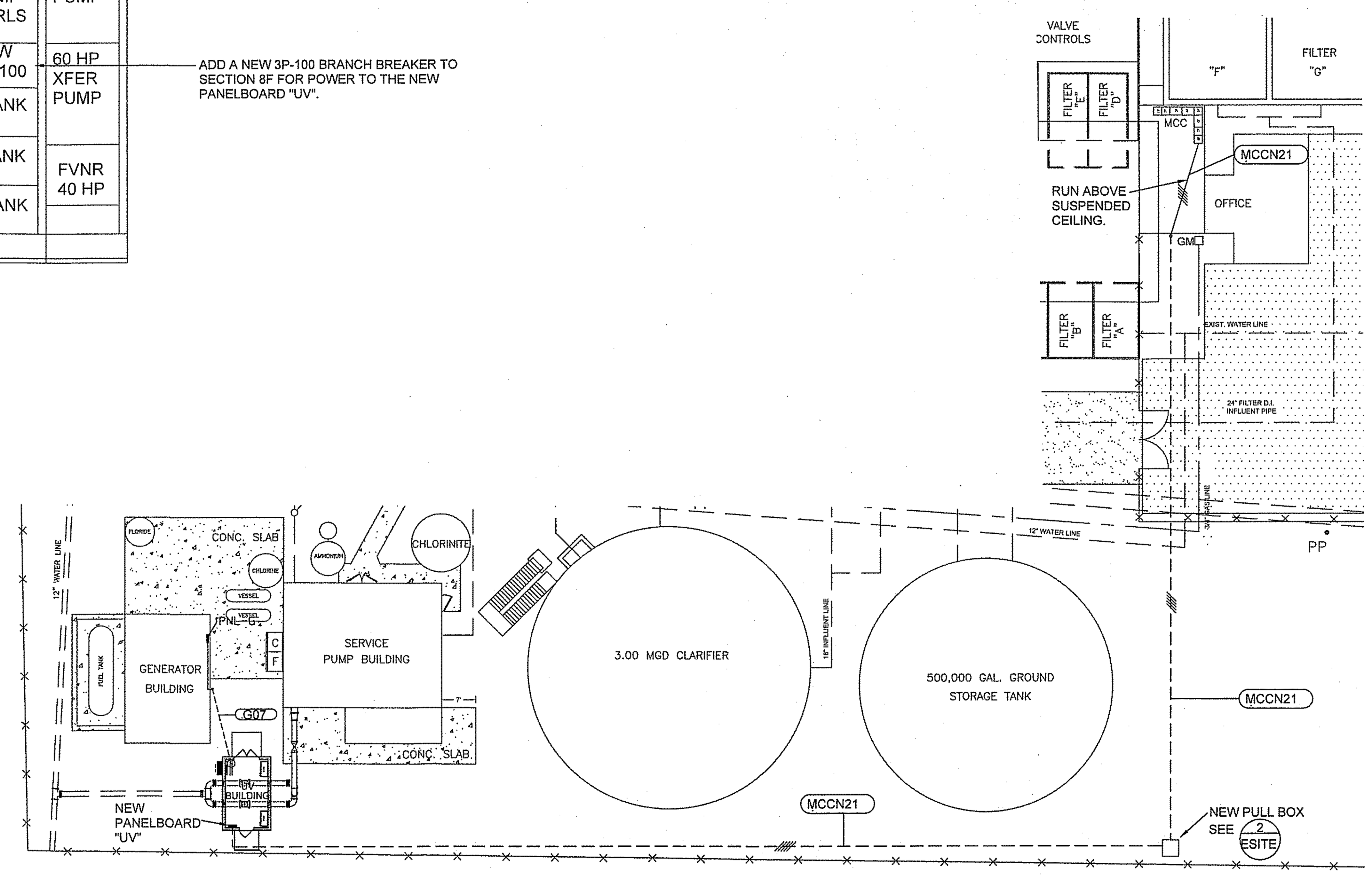

1 ESITE ELECTRICAL SITE PLAN 1"=20'

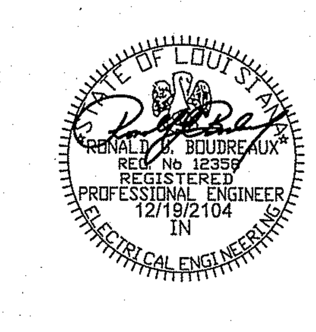

ELECTRICAL LEGEND	
	SAFETY SWITCH
S_3	THREE WAY SWITCH
	DUPLEX RECEPTACLE
XXX	CONDUIT NUMBER - SEE CONDUIT SCHEDULE FOR DETAILS.
	277 VOLT RECEPTACLE

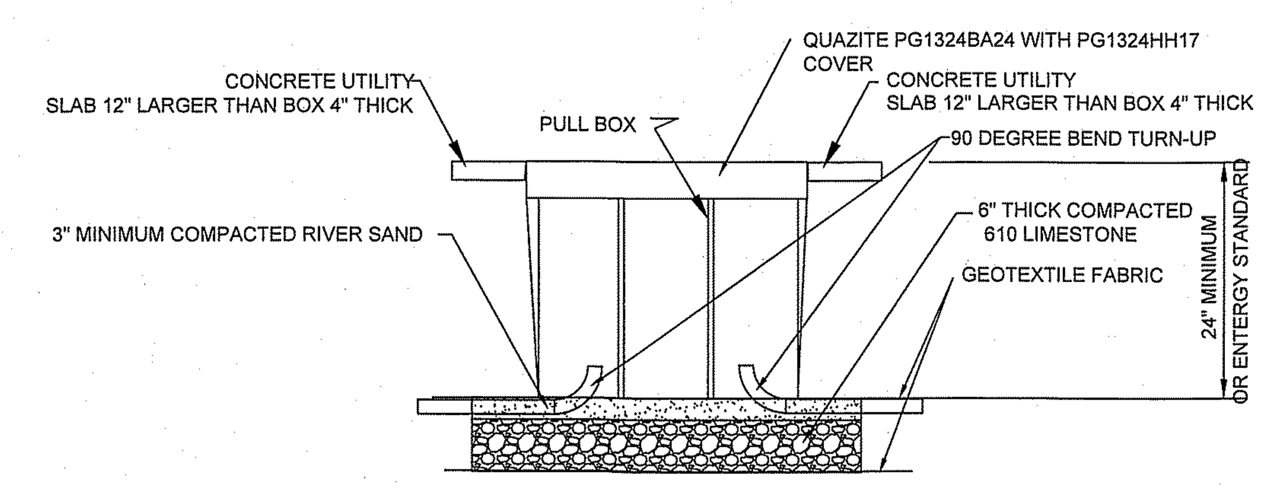

2 ESITE PULL BOX DETAIL NONE

C.J. SAVOIE CONSULTING ENGINEERS, INC.
ENGINEERS DESIGNERS PLANNERS

UV DISINFECTION ASSEMBLY FOR LIONS WATER TREATMENT PLANT

ELECTRICAL SITE PLAN

ST. JOHN THE BAPTIST PARISH

RJB/SPB
REVISED:
APPROVED BY: RJB
JOB #: S-84-125
DATE: JAN., 2015
AS SHOWN
SHEET NUMBER
ESITE