Addendum 1

DATE: June 19, 2019

ITEM: RFQ 2019-02 – Supervisory Control and Data and Acquisition (SCADA) On-Call

This addendum is issued to answer Potential Consultant questions and add Standard Form SJB-1000.

1. What is the existing SCADA system software?
   Answer: Lookout - if more is needed let me know.

2. Usage of Scada Soft Ware ?
   a. Do you use it for both monitoring and control?
      Answer: Yes

   b. What is the communication infrastructure?
      Answer: The Radio is a Pro-soft Industrial Frequency Hopping 2.4 GHz Ethernet (RLX2-IFH24E). This should tell them the type of wireless communication signal used. See the attached drawing for your use. If you send these drawing make sure you state that they are for information only.

   c. Is there a mobile app in place?
      Answer: Yes

   d. Do you have a historian setup?
      Answer: Yes, we have a historian server but that may need to be expanded based on storage capacity of what you are adding.

   e. Do you have remote alarm notifications?
      Answer: Yes

   f. Are you getting reports?
      Answer: Yes

   g. Do you use any third-party data management software in addition to the SCADA software?
      Answer: No

3. What types of PLCs are in the field? (PN or Family)
   Answer: See the attached drawings for what ICE installed. They are Allen Bradley.

4. What types of HMIs are in the field? (PN or Family)
   Answer: See the attached drawings for what ICE installed. They are Allen Bradley.

5. How many sites exist for each type:
   a. WTP
      Answer: 6

      WWTP
      Answer: Soon to be 1

   b. Pump Stations
      Answer: 10 No SCADA

   c. Sewage Collection Sites
      Answer: 50

   d. Drainage Systems
      Answer: 10 No SCADA

**Just be sure that whatever is installed is open architecture and not a proprietary software or equipment. You do not want to be held hostage by any one manufacture. You do not want to have to pay yearly fees for PLC or programming software. **

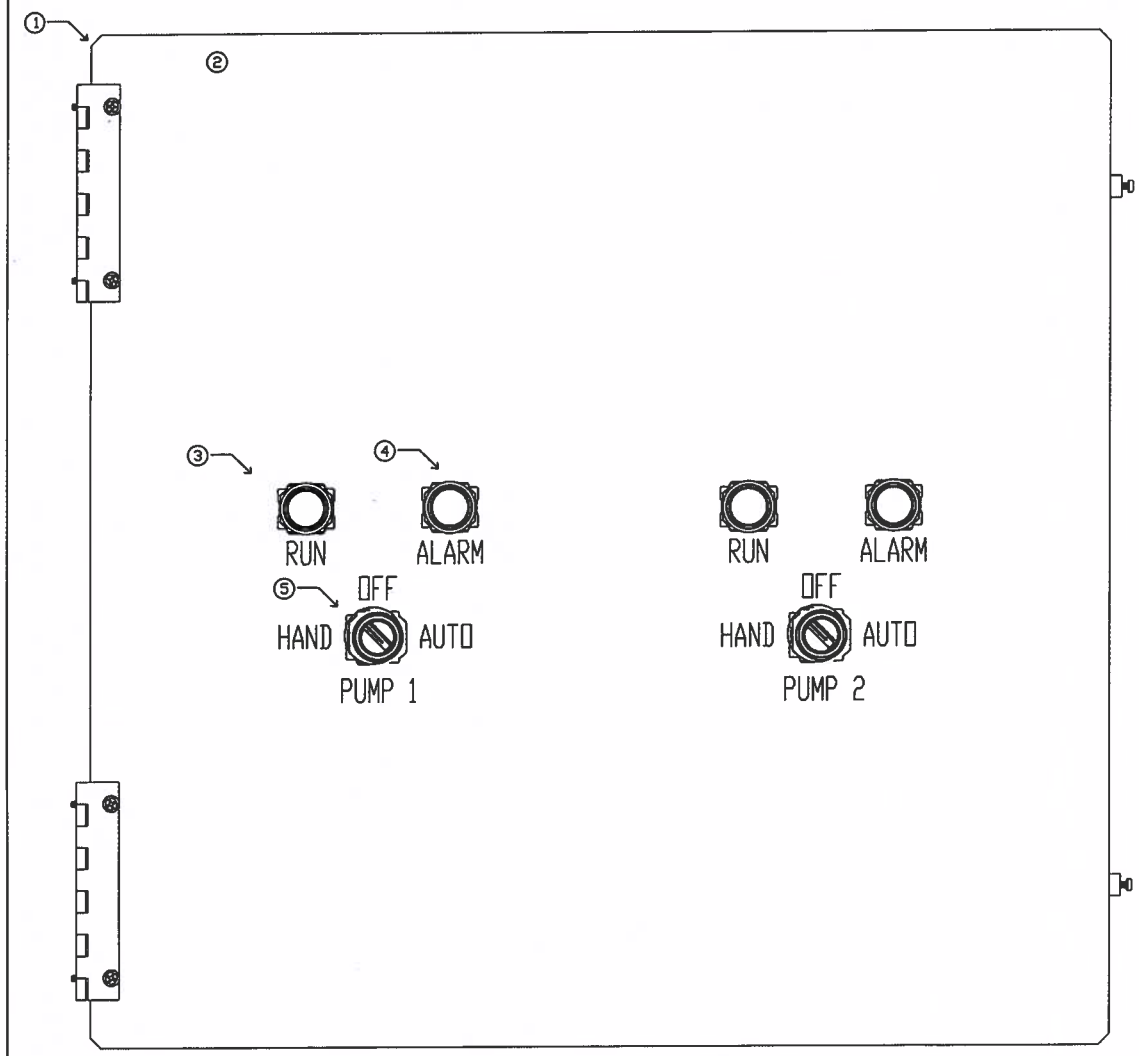

BILL OF MATERIAL				
ITEM NO.	QTY	DESCRIPTION	MANUFACTURE	PART NUMBER
1	1	ENCLOSURE	Allied	AM24240RL
2	1	DEAD FRONT PANEL	Allied	HFP2424
3	2	PILOT LIGHT RED	IDEC	APD199DN-R-120V
4	2	PILOT LIGHT AMBER	IDEC	APD199DN-A-120V
5	2	30mm 3-POSITION SWITCH	IDEC	ASD320N

STATE OF LOUISIANA
DANIEL T. FOGLESONG
License No. 35416
PROFESSIONAL ENGINEER
IN
CONTROL SYSTEMS ENGINEER

6/25/2015

WASTEWATER LIFT STATION
TELEMETRY SYSTEM FOR ST. JOHN
THE BAPTIST PARISH, LOUISIANA
PUMP CONTROLLERS

NO.	DATE	REVISION DESCRIPTION
0	6/25/15	ISSUED FOR CONSTRUCTION

DESIGNED ALF CHECKED FDF APPROVED DTF

PROCESS AND CONTROLS ENGINEERING
9 FLANDERS STREET
NEW ORLEANS, LA 70124
PACE

I.C.E. SALES & SERVICE, L.L.C.
2801 HWY. 306, SUITE B
DES ALLEMANDS, LA 70030

DRAWING
LS-00A

MCREINE TRAILER PARK
LIFT STATION

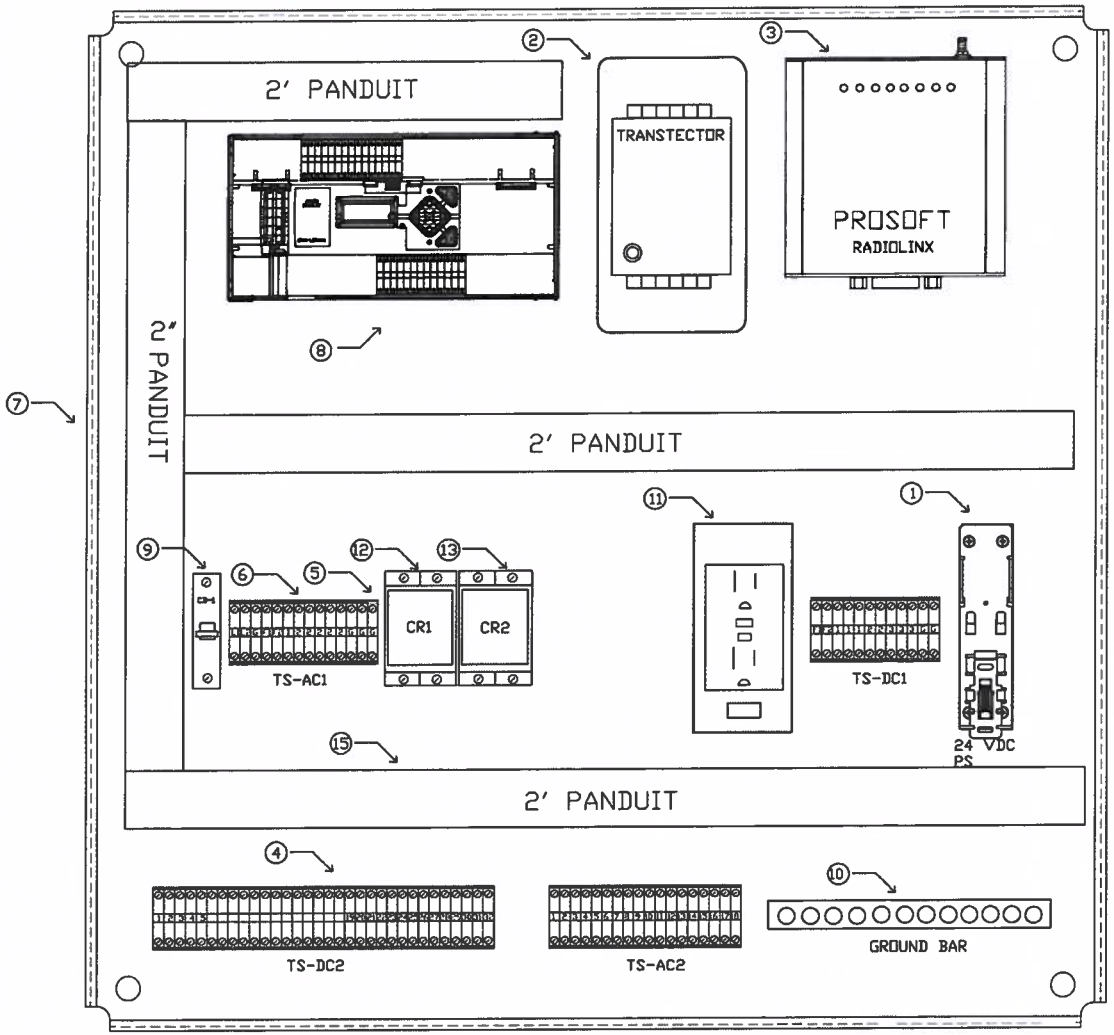

BILL OF MATERIAL				
ITEM NO.	QTY	DESCRIPTION	MANUFACTURE	PART NUMBER
1	1	POWER SUPPLY 24VDC	RHINO	PSB24-060S
2	1	AC SURGE PROTECTOR	TRANSECTOR	1104-15-000
3	1	RADIO	PROSOFT	RLX2-IFH24E
4	66	TERMINAL STRIPS	WAGO	280-601
5	5	GROUND STRIPS	WAGO	280-607
6	4	FUSE BLOCK	WAGO	281-623/281-418
7	1	BACK PLATE	ALLIED	PA2424
8	1	PLC	ALLEN BRADLEY	1766-L32BWA
9	1	CIRCUIT BREAKER	ALLEN BRADLEY	1489-M1C200
10	1	GROUND BAR	SQUARE D	PK12GTA
11	1	RECEPTACLE GFCI	ALLEN BRADLEY	1492-REC20G
12	2	RELAYS	IDEC	RH2B-UL-AC120
13	2	RELAY BASE	IDEC	SH2B-05
14		WIRE DUCT 2"x 1.5"	BETADUCT	BG2X1.5LG6.5-C

STATE OF LOUISIANA
DANIEL T. FOGLESONG
License No. 35416
PROFESSIONAL ENGINEER IN CONTROL SYSTEMS ENGINEER
6/25/2015

WASTEWATER LIFT STATION
TELEMETRY SYSTEM FOR ST. JOHN THE BAPTIST PARISH, LOUISIANA
PUMP CONTROLLERS

NO.	DATE	REVISION DESCRIPTION	
0	6/25/15	ISSUED FOR CONSTRUCTION	DESIGNED: ALF CHECKED: FRF APPROVED: DTF

PROCESS AND CONTROLS ENGINEERING
9 FLANDERS STREET
NEW ORLEANS, LA 70124
PACE

I.C.E. SALES & SERVICE, L.L.C.
2801 HWY. 306, SUITE B
DES ALLEMANDS, LA 70030

DRAWING
LS-00B

MCREINE TRAILER PARK
LIFT STATION

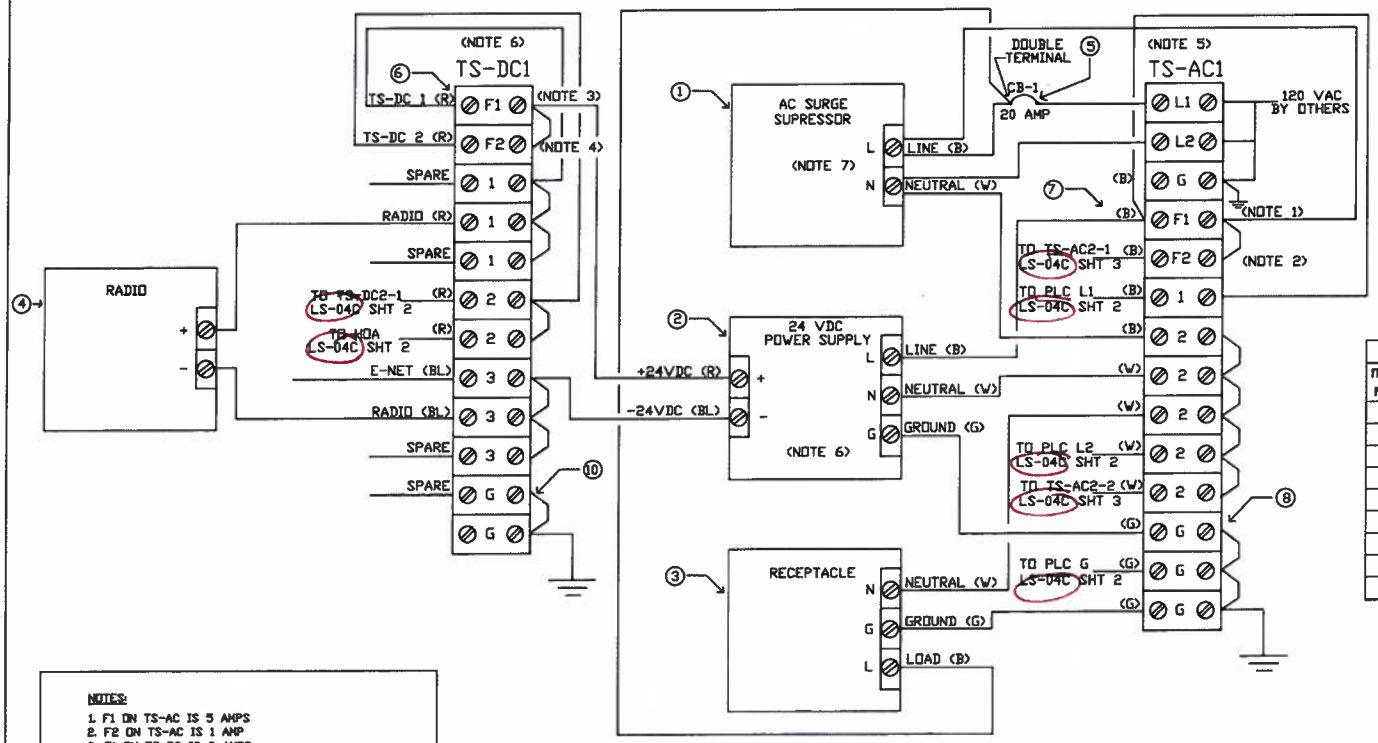

BILL OF MATERIAL				
ITEM NO.	QTY	DESCRIPTION	MANUFACTURE	PART NUMBER
1	1	AC SURGE SUPRESSOR	TRANSTECTOR	1104-15-000
2	1	POWER SUPPLY 24 VDC	RHINO	PSB24-060S
3	1	RECEPTACLE GFCI	ALLEN BRADLEY	1492-REC20G
4	1	RADIO	PROSOFT	RLX2-IFH24E
5	1	CIRCUIT BREAKER	ALLEN BRADLEY	1489-M1C200
6	16	TERMINALS	WAGO	280-601
7	4	FUSE BLOCKS	WAGO	281-623/281-418
8	6	GROUND TERMINALS	WAGE	280-607
9		14 AWG 600V THHN WIRE	REPUBLIC WIRE	

NOTES:

1. F1 ON TS-AC IS 5 AMPS
2. F2 ON TS-AC IS 1 AMP
3. F1 ON TS-DC IS 2 AMPS
4. F2 ON TS-DC IS 1 AMP
5. TOTAL AC LOAD 2.23 AMPS @ 120 VAC
6. TOTAL DC LOAD IS .2 AMPS @ 24 VDC
7. AC SURGE PROTECTOR DESIGNED FOR TWO WIRES ON EACH TERMINAL

GENERAL:

1. TERMINALS HAVE PLUG IN JUMPERS, TWO WIRES ARE NOT LANDED ON THE SAME TERMINAL
2. WIRE COLOR CODING:
   120 VAC LINE - BLACK (B)
   120 VAC NEUTRAL - WHITE (W)
   24 VDC POSITIVE - RED (R)
   24 VDC NEGATIVE - BLUE (BL)
   120 VAC / 24 VDC GROUND - GREEN (G)
   ALL WIRE IS 14 AWG 600V THHN

STATE OF LOUISIANA
DANIEL T. FOGLESONG
License No. 35416
PROFESSIONAL ENGINEER IN CONTROL SYSTEMS ENGINEERING
6/25/2015

WASTEWATER LIFT STATION TELEMETRY SYSTEM FOR ST. JOHN THE BAPTIST PARISH, LOUISIANA PUMP CONTROLLERS

NO.	DATE	REVISION DESCRIPTION
0	6/25/15	ISSUED FOR CONSTRUCTION

DESIGNED ALF CHECKED FRF APPROVED DTF

PROCESS AND CONTROLS ENGINEERING
9 FLANDERS STREET
NEW ORLEANS, LA 70124

PACE

I.C.E. SALES & SERVICE, L.L.C.
2801 HWY. 306, SUITE B
DES ALLEMANDS, LA 70030

DRAWING
LS-00C SHT 1

MCREINE TRAILER PARK
LIFT STATION

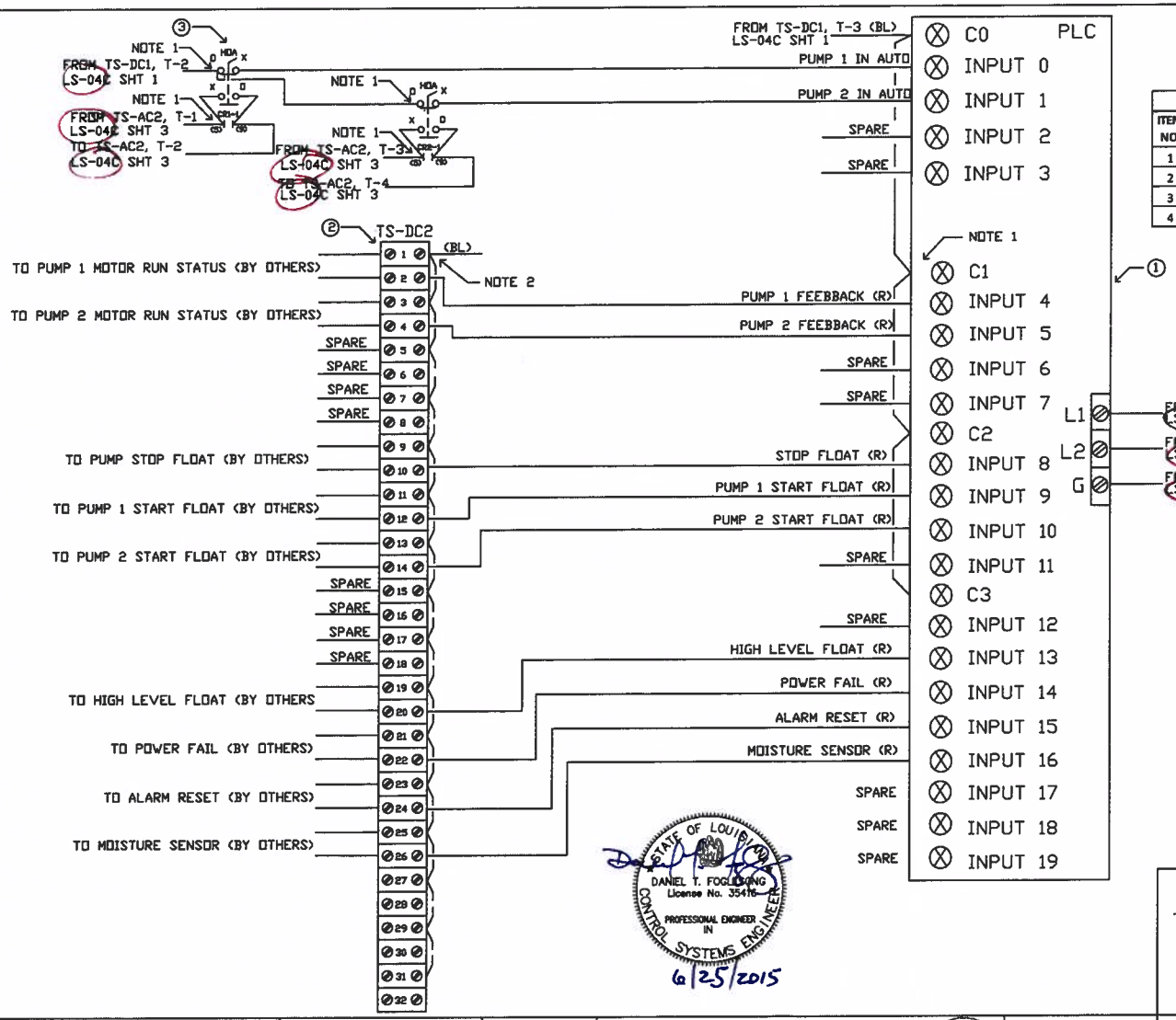

BILL OF MATERIAL				
ITEM NO.	QTY	DESCRIPTION	MANUFACTURE	PART NUMBER
1	1	MICROLOGIX 1400 PLC	ALLEN BRADLEY	1766-L32BWA
2	32	TERMINALS	WAGO	280-601
3	2	3 POSITION SWITCH (HOA)	IDEC	ASD320N
4		14 AWG 600V THHN WIRE	REPUBLIC WIRE	

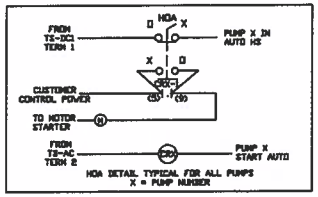

NOTES:
1. DOUBLE TERMINALS
2. TERMINALS HAVE PLUG IN JUMPERS, TWO WIRES ARE NOT LANDED ON THE SAME TERMINAL

GENERAL:
TERMINALS HAVE PLUG IN JUMPERS, TWO WIRES ARE NOT LANDED ON THE SAME TERMINAL

WIRE COLOR CODING:
120 VAC LINE - BLACK (B)
120 VAC NEUTRAL - WHITE (W)
24 VDC POSITIVE - RED (R)
24 VDC NEGATIVE - BLUE (BL)
120 VAC / 24 VDC GROUND - GREEN (G)

ALL WIRE IS 14 AWG 600V THHN

STATE OF LOUISIANA
DANIEL T. FOGLESONG
License No. 35416
PROFESSIONAL ENGINEER IN CONTROL SYSTEMS ENGINEER
6/25/2015

WASTEWATER LIFT STATION TELEMETRY SYSTEM FOR ST. JOHN THE BAPTIST PARISH, LOUISIANA PUMP CONTROLLERS

NO.	DATE	REVISION DESCRIPTION	DESIGNED ALF	CHECKED FRF	APPROVED DTF
0	6/25/15	ISSUED FOR CONSTRUCTION			

PROCESS AND CONTROLS ENGINEERING
9 FLANDING STREET
NEW ORLEANS, LA 70124
PACE

I.C.E. SALES & SERVICE, L.L.C.
2801 HWY. 306, SUITE B
DES ALLEMANDS, LA 70030

INSTRUMENTATION CONTROLS EQUIPMENT

DRAWING
LS-00C SHT 2

MCREINE TRAILER PARK LIFT STATION

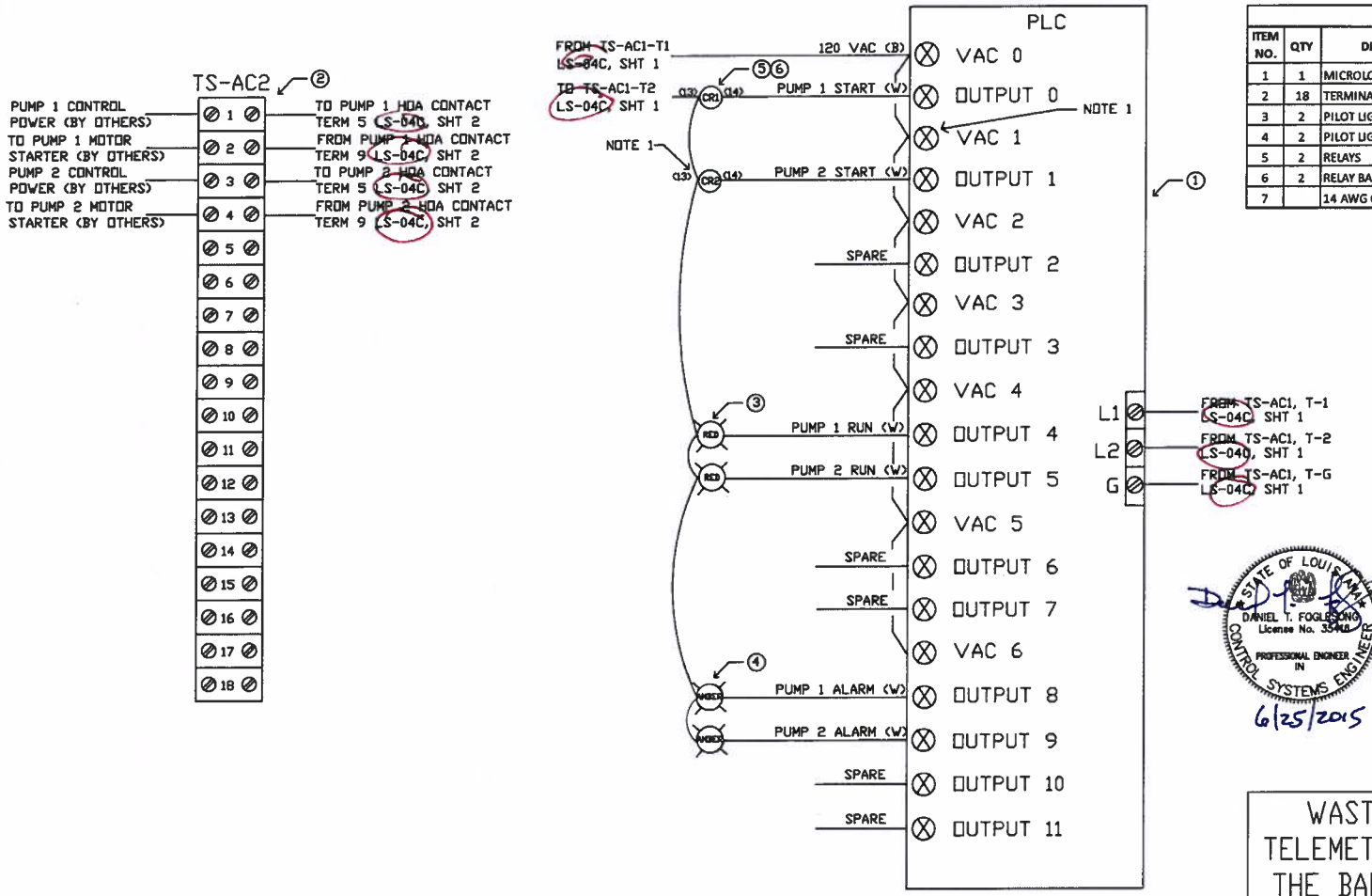

BILL OF MATERIAL				
ITEM NO.	QTY	DESCRIPTION	MANUFACTURE	PART NUMBER
1	1	MICROLOGIX 1400 PLC	ALLEN BRADLEY	1766-L32BWA
2	18	TERMINALS	WAGO	280-601
3	2	PILOT LIGHT RED	IDEC	APD199DN-R-120V
4	2	PILOT LIGHT AMBER	IDEC	APD199DN-A-120V
5	2	RELAYS	IDEC	RH2B-UL-AC120
6	2	RELAY BASE	IDEC	SH2B-05
7		14 AWG 600V THHN WIRE	REPUBLIC WIRE	

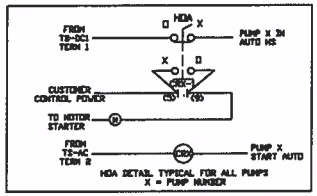

NOTES:

1. DOUBLE TERMINALS

GENERAL:

WIRE COLOR CODING:
120 VAC LINE - BLACK (B)
120 VAC NEUTRAL - WHITE (W)
24 VDC POSITIVE - RED (R)
24 VDC NEGATIVE - BLUE (BL)

ALL WIRE IS 14 AWG 600V THHN
120 VAC / 24 VDC GROUND - GREEN (G)

STATE OF LOUISIANA
DANIEL T. FOGLESONG
License No. 35448
PROFESSIONAL ENGINEER IN CONTROL SYSTEMS ENGINEER
6/25/2015

WASTEWATER LIFT STATION TELEMETRY SYSTEM FOR ST. JOHN THE BAPTIST PARISH, LOUISIANA PUMP CONTROLLERS

NO.	DATE	REVISION DESCRIPTION
0	6/25/15	ISSUED FOR CONSTRUCTION

DESIGNED ALF CHECKED FDF APPROVED DTF

PROCESS AND CONTROLS ENGINEERING
9 FLANDERS STREET
NEW ORLEANS, LA 70124

PACE

I.C.E. SALES & SERVICE, L.L.C.
2801 HWY. 306, SUITE B
DES ALLEMANDS, LA 70030

DRAWING LS-00C SHT 3

MCREINE TRAILER PARK LIFT STATION

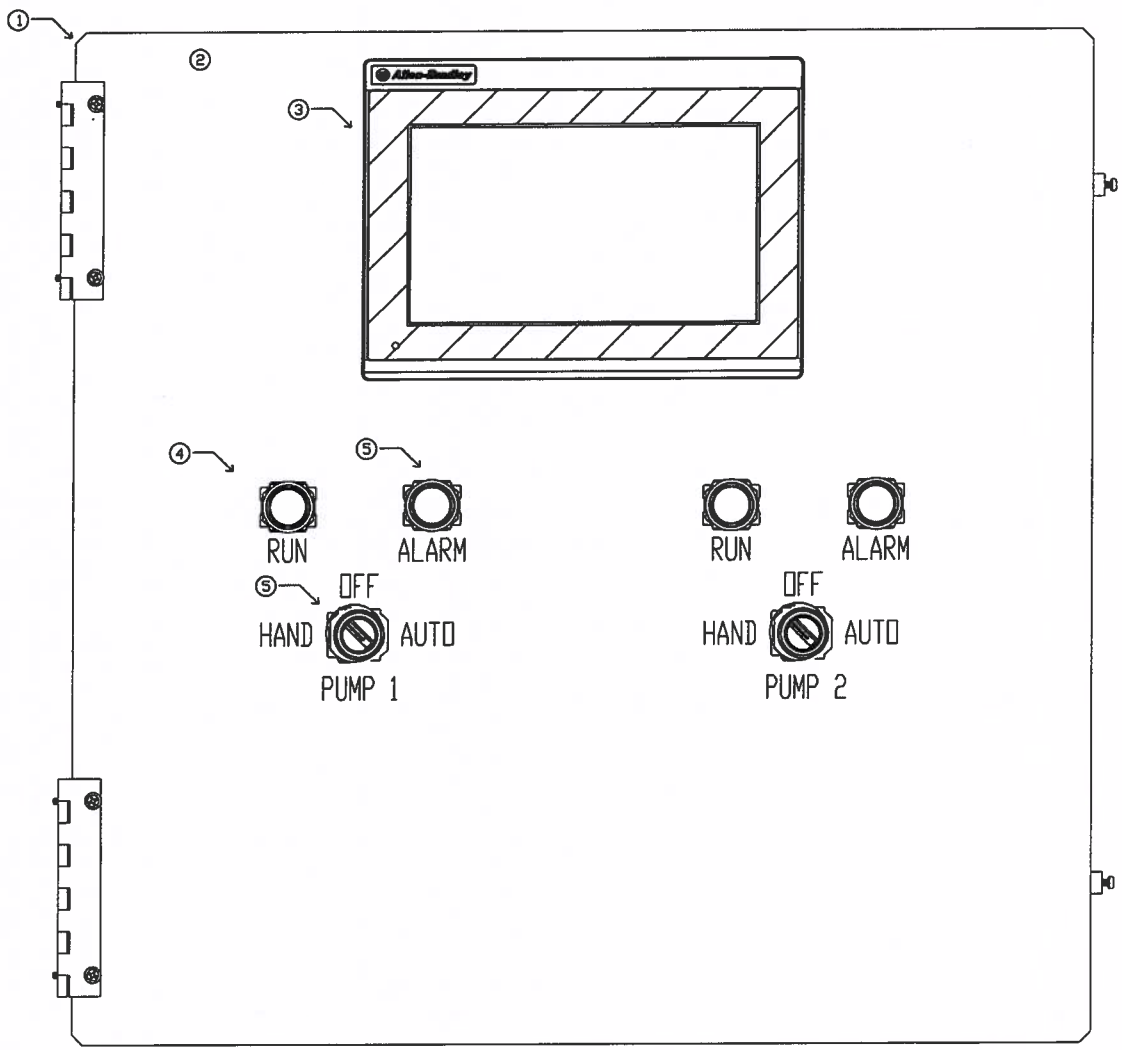

BILL OF MATERIAL				
ITEM NO.	QTY	DESCRIPTION	MANUFACTURE	PART NUMBER
1	1	ENCLOSURE	Allied	AM24240RL
2	1	DEAD FRONT PANEL	Allied	HFP2424
3	2	PILOT LIGHT RED	IDEC	APD199DN-R-120V
4	2	PILOT LIGHT AMBER	IDEC	APD199DN-A-120V
5	2	30mm 3-POSITION SWITCH	IDEC	ASD320N

STATE OF LOUISIANA
DANIEL T. FOGLESONG
License No. 35418
PROFESSIONAL ENGINEER IN CONTROL SYSTEMS ENGINEER
6/25/2015

WASTEWATER LIFT STATION
TELEMETRY SYSTEM FOR ST. JOHN
THE BAPTIST PARISH, LOUISIANA
PUMP CONTROLLERS

NO.	DATE	REVISION DESCRIPTION
0	6/25/15	ISSUED FOR CONSTRUCTION

DESIGNED ALF CHECKED FBF APPROVED BTF

PROCESS AND CONTROLS ENGINEERING
9 FLAMBEAU STREET
NEW ORLEANS, LA 70124
PACE

I.C.E. SALES & SERVICE, L.L.C.
2801 HWY. 306, SUITE B
DES ALLEMANDS, LA 70030

DRAWING
LS-01A

BROOKS PRODUCTS
LIFT STATION

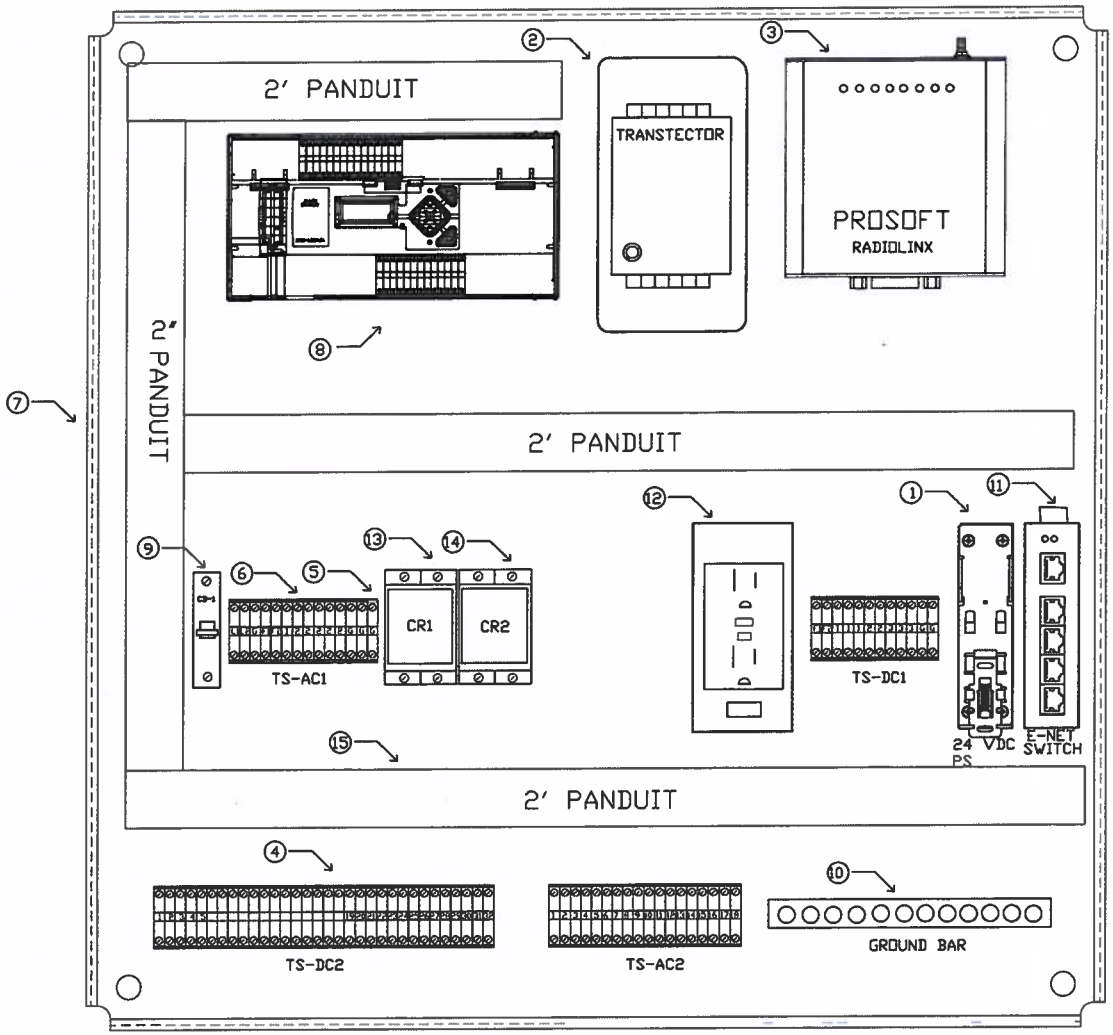

BILL OF MATERIAL				
ITEM NO.	QTY	DESCRIPTION	MANUFACTURE	PART NUMBER
1	1	POWER SUPPLY 24VDC	RHINO	PSB24-060S
2	1	AC SURGE PROTECTOR	TRANSECTOR	1104-15-000
3	1	RADIO	PROSOFT	RLX2-IFH24E
4	66	TERMINAL STRIPS	WAGO	280-601
5	5	GROUND STRIPS	WAGO	280-607
6	4	FUSE BLOCK	WAGO	281-623/281-418
7	1	BACK PLATE	ALLIED	PA2424
8	1	PLC	ALLEN BRADLEY	1766-L32BWA
9	1	CIRCUIT BREAKER	ALLEN BRADLEY	1489-M1C200
10	1	GROUND BAR	SQUARE D	PK12GTA
11	1	ETHERNET SWITCH	B&B ELECTRONICS	ESW205-T
12	1	RECEPTACLE GFCI	ALLEN BRADLEY	1492-REC20G
13	2	RELAYS	IDEC	RH2B-UL-AC120
14	2	RELAY BASE	IDEC	SH2B-05
15		WIRE DUCT 2"x 1.5"	BETADUCT	BG2X1.5LG6.5-C

STATE OF LOUISIANA
DANIEL T. FOGLESONG
License No. 35416
PROFESSIONAL ENGINEER
IN
CONTROL SYSTEMS ENGINEER
6/25/2015

WASTEWATER LIFT STATION
TELEMETRY SYSTEM FOR ST. JOHN
THE BAPTIST PARISH, LOUISIANA
PUMP CONTROLLERS

BROOKS PRODUCTS
LIFT STATION

NO.	DATE	REVISION DESCRIPTION
0	6/25/15	ISSUED FOR CONSTRUCTION

DESIGNED ALF CHECKED FRF APPROVED DTF

PROCESS AND CONTROLS ENGINEERING
9 FLANDERS STREET
NEW ORLEANS, LA 70124
PACE

I.C.E. SALES & SERVICE, L.L.C.
2801 HWY. 306, SUITE B
DES ALLEMANDS, LA 70030

DRAWING
LS-01B

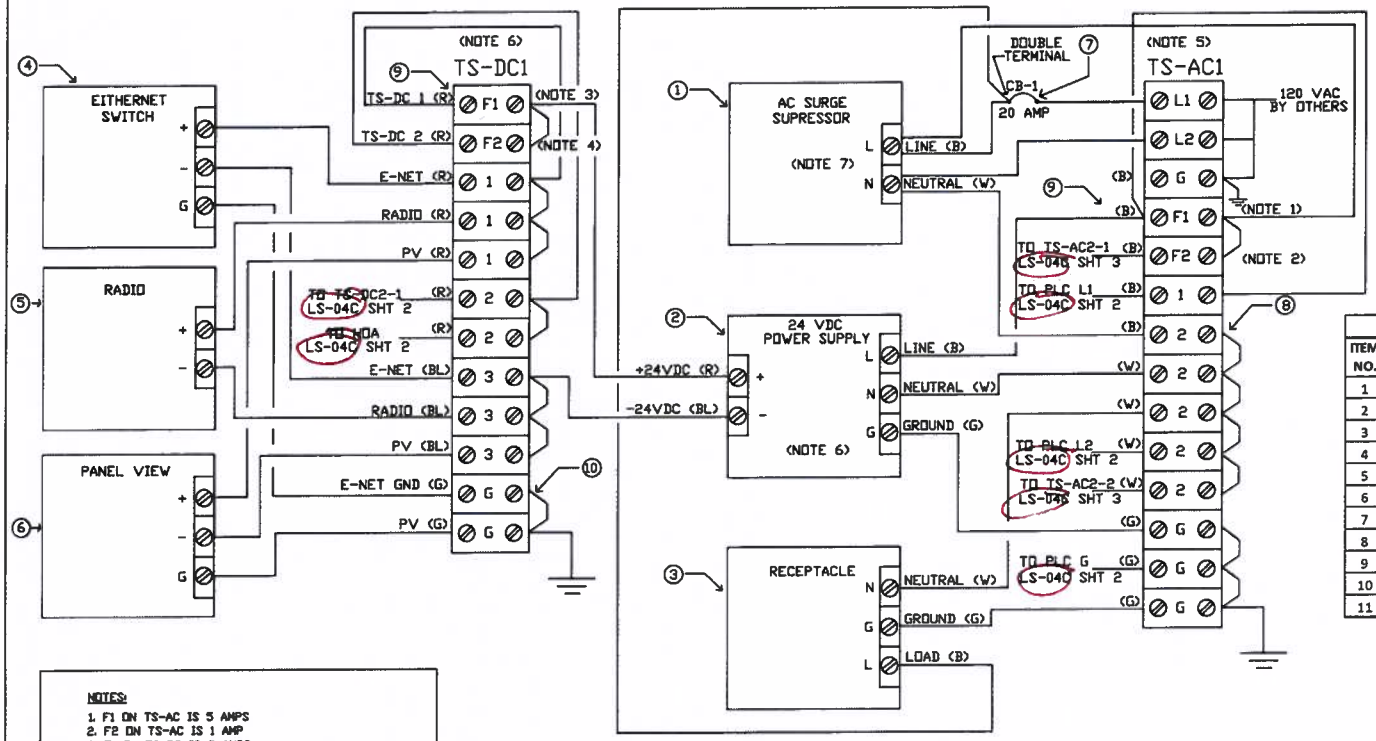

BILL OF MATERIAL				
ITEM NO.	QTY	DESCRIPTION	MANUFACTURE	PART NUMBER
1	1	AC SURGE SUPRESSOR	TRANSTECTOR	1104-15-000
2	1	POWER SUPPLY 24 VDC	RHINO	PSB24-060S
3	1	RECEPTACLE GFCI	ALLEN BRADLEY	1492-REC20G
4	1	ETHERNET SWITCH	B & B ELECTRONICS	ESW205-T
5	1	RADIO	PROSOFT	RLX2-IFH24E
6	1	PANELVIEW	ALLEN BRADLEY	2711R-T7T
7	1	CIRCUIT BREAKER	ALLEN BRADLEY	1489-M1C200
8	16	TERMINALS	WAGO	280-601
9	4	FUSE BLOCKS	WAGO	281-623/281-418
10	6	GROUND TERMINALS	WAGE	280-607
11		14 AWG 600V THHN WIRE	REPUBLIC WIRE	

NOTES:

1. F1 ON TS-AC IS 5 AMPS
2. F2 ON TS-AC IS 1 AMP
3. F1 ON TS-DC IS 2 AMPS
4. F2 ON TS-DC IS 1 AMP
5. TOTAL AC LOAD 2.23 AMPS @ 120 VAC
6. TOTAL DC LOAD IS .95 AMPS @ 24 VDC
7. AC SURGE PROTECTOR DESIGNED FOR TWO WIRES ON EACH TERMINAL

GENERAL:

1. TERMINALS HAVE PLUG IN JUMPERS, TWO WIRES ARE NOT LANDED ON THE SAME TERMINAL
2. WIRE COLOR CODING:
   120 VAC LINE - BLACK (B)
   120 VAC NEUTRAL - WHITE (W)
   24 VDC POSITIVE - RED (R)
   24 VDC NEGATIVE - BLUE (BL)
   120 VAC / 24 VDC GROUND - GREEN (G)
   ALL WIRE IS 14 AWG 600V THHN

STATE OF LOUISIANA
DANIEL T. FOGLESONG
License No. 35416
PROFESSIONAL ENGINEER IN CONTROL SYSTEMS ENGINEER
6/25/2015

WASTEWATER LIFT STATION TELEMETRY SYSTEM FOR ST. JOHN THE BAPTIST PARISH, LOUISIANA PUMP CONTROLLERS

NO.	DATE	REVISION DESCRIPTION
0	6/25/15	ISSUED FOR CONSTRUCTION

DESIGNED ALF CHECKED FRF APPROVED DTF

PROCESS AND CONTROLS ENGINEERING
9 FLANDERS STREET
NEW ORLEANS, LA 70124

PACE

I.C.E. SALES & SERVICE, L.L.C.
2801 HWY. 306, SUITE B
DES ALLEMANDS, LA 70030

DRAWING LS-01C SHT 1

BROOKS PRODUCTS
LIFT STATION

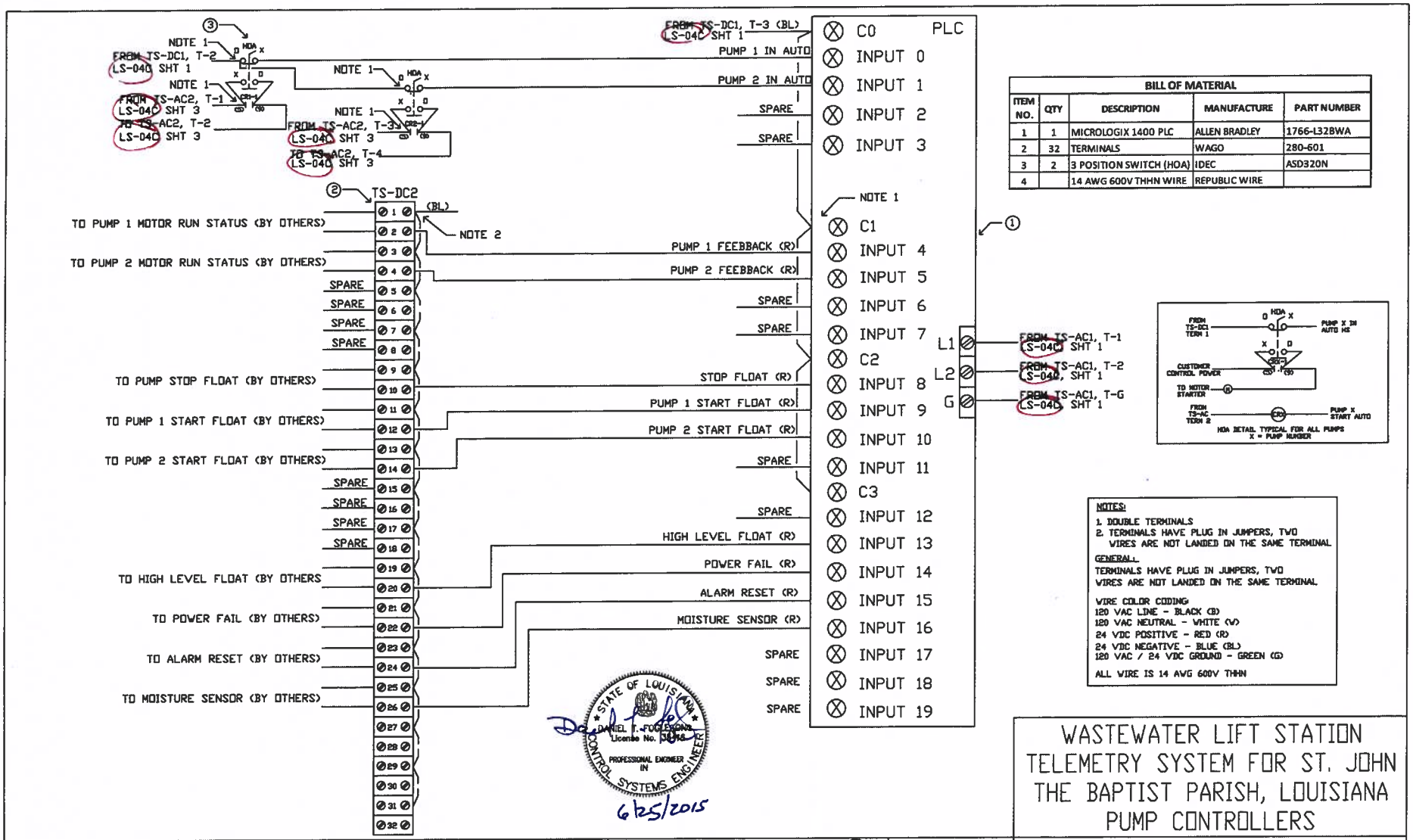

BILL OF MATERIAL				
ITEM NO.	QTY	DESCRIPTION	MANUFACTURE	PART NUMBER
1	1	MICROLOGIX 1400 PLC	ALLEN BRADLEY	1766-L32BWA
2	32	TERMINALS	WAGO	280-601
3	2	3 POSITION SWITCH (HOA)	IDEC	ASD320N
4		14 AWG 600V THHN WIRE	REPUBLIC WIRE	

NOTES:

1. DOUBLE TERMINALS
2. TERMINALS HAVE PLUG IN JUMPERS, TWO WIRES ARE NOT LANDED ON THE SAME TERMINAL

GENERAL:

TERMINALS HAVE PLUG IN JUMPERS, TWO WIRES ARE NOT LANDED ON THE SAME TERMINAL

WIRE COLOR CODING:
120 VAC LINE - BLACK (B)
120 VAC NEUTRAL - WHITE (W)
24 VDC POSITIVE - RED (R)
24 VDC NEGATIVE - BLUE (BL)
120 VAC / 24 VDC GROUND - GREEN (G)

ALL WIRE IS 14 AWG 600V THHN

WASTEWATER LIFT STATION TELEMETRY SYSTEM FOR ST. JOHN THE BAPTIST PARISH, LOUISIANA PUMP CONTROLLERS

NO.	DATE	REVISION DESCRIPTION
0	6/25/15	ISSUED FOR CONSTRUCTION

DESIGNED: ALF CHECKED: TBF APPROVED: DTF

PROCESS AND CONTROLS ENGINEERING
9 FLANDERS STREET
NEW ORLEANS, LA 70124

PACE

I.C.E. SALES & SERVICE, L.L.C.
2801 HWY. 306, SUITE B
DES ALLEMANDS, LA 70030

DRAWING
LS-01C SHT 2

BROOKS PRODUCTS
LIFT STATION

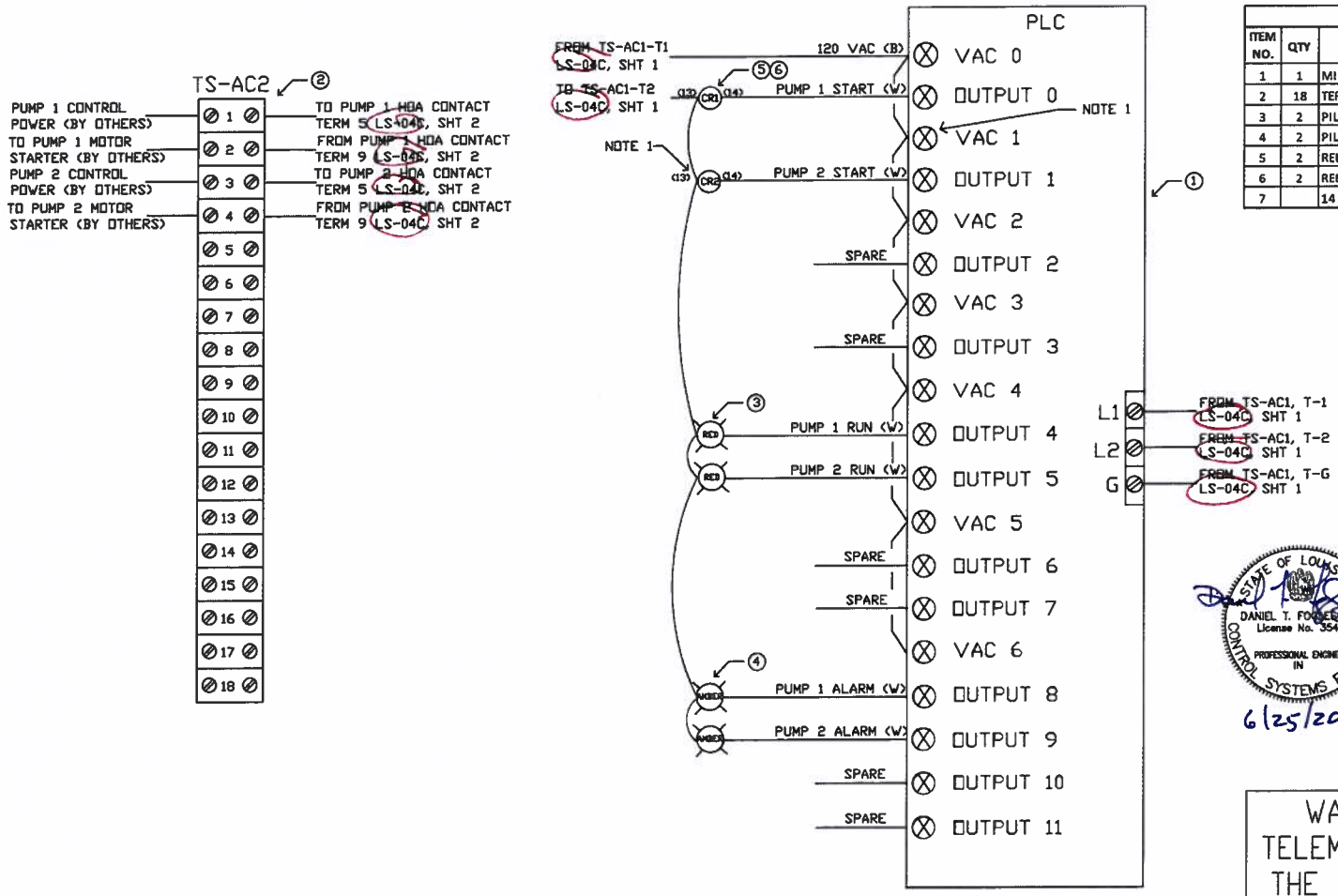

BILL OF MATERIAL				
ITEM NO.	QTY	DESCRIPTION	MANUFACTURE	PART NUMBER
1	1	MICROLOGIX 1400 PLC	ALLEN BRADLEY	1766-L32BWA
2	18	TERMINALS	WAGO	280-601
3	2	PILOT LIGHT RED	IDEC	APD199DN-R-120V
4	2	PILOT LIGHT AMBER	IDEC	APD199DN-A-120V
5	2	RELAYS	IDEC	RH2B-UL-AC120
6	2	RELAY BASE	IDEC	SH2B-05
7		14 AWG 600V THHN WIRE	REPUBLIC WIRE	

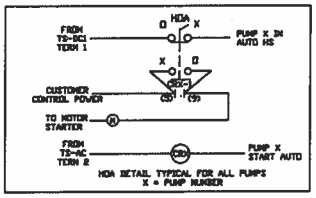

STATE OF LOUISIANA
DANIEL T. FOREBERG
License No. 35416
PROFESSIONAL ENGINEER IN CONTROL SYSTEMS ENGINEER
6/25/2015

NOTES:
1. DOUBLE TERMINALS

GENERAL:
WIRE COLOR CODING:
120 VAC LINE - BLACK (B)
120 VAC NEUTRAL - WHITE (W)
24 VDC POSITIVE - RED (R)
24 VDC NEGATIVE - BLUE (BL)

ALL WIRE IS 14 AWG 600V THHN
120 VAC / 24 VDC GROUND - GREEN (G)

WASTEWATER LIFT STATION TELEMETRY SYSTEM FOR ST. JOHN THE BAPTIST PARISH, LOUISIANA PUMP CONTROLLERS

NO.	DATE	REVISION DESCRIPTION
0	6/25/15	ISSUED FOR CONSTRUCTION

DESIGNED: ALF CHECKED: FBF APPROVED: DTF

PROCESS AND CONTROLS ENGINEERING
9 FLAMINGO STREET
NEW ORLEANS, LA 70124
PACE

I.C.E. SALES & SERVICE, L.L.C.
2801 HWY. 306, SUITE B
DES ALLEMANDS, LA 70030

DRAWING LS-04C SHT 3

BROOKS PRODUCTS
LIFT STATION

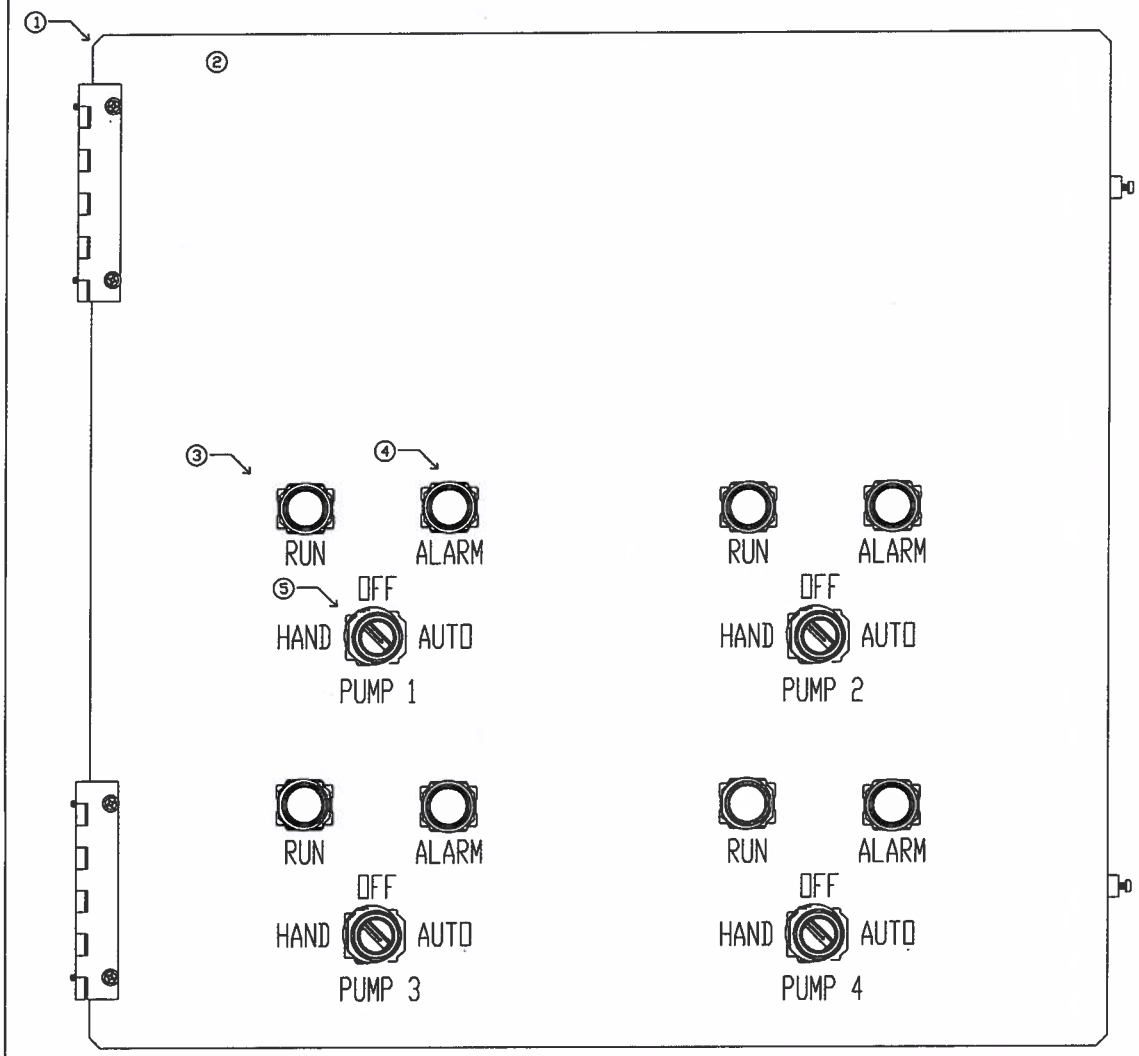

BILL OF MATERIAL				
ITEM NO.	QTY	DESCRIPTION	MANUFACTURE	PART NUMBER
1	1	ENCLOSURE	Allied	AM24240RL
2	1	DEAD FRONT PANEL	Allied	HFP2424
3	4	PILOT LIGHT RED	IDEC	APD199DN-R-120V
4	4	PILOT LIGHT AMBER	IDEC	APD199DN-A-120V
5	4	30mm 3-POSITION SWITCH	IDEC	ASD320N

STATE OF LOUISIANA
DANIEL T. FOGLESONG
License No. 35416
PROFESSIONAL ENGINEER IN CONTROL SYSTEMS ENGINEER
6/25/2015

WASTEWATER LIFT STATION
TELEMETRY SYSTEM FOR ST. JOHN THE BAPTIST PARISH, LOUISIANA
PUMP CONTROLLERS

NO.	DATE	REVISION DESCRIPTION
0	6/25/15	ISSUED FOR CONSTRUCTION

DESIGNED ALF CHECKED FDT APPROVED DTF

PROCESS AND CONTROLS ENGINEERING
9 FLANDERS STREET
NEW ORLEANS, LA 70124

PACE

I.C.E. SALES & SERVICE, L.L.C.
2801 HWY. 306, SUITE B
DES ALLEMANDS, LA 70030

DRAWING
LS-46A

WEST 1ST ST
LIFT STATION

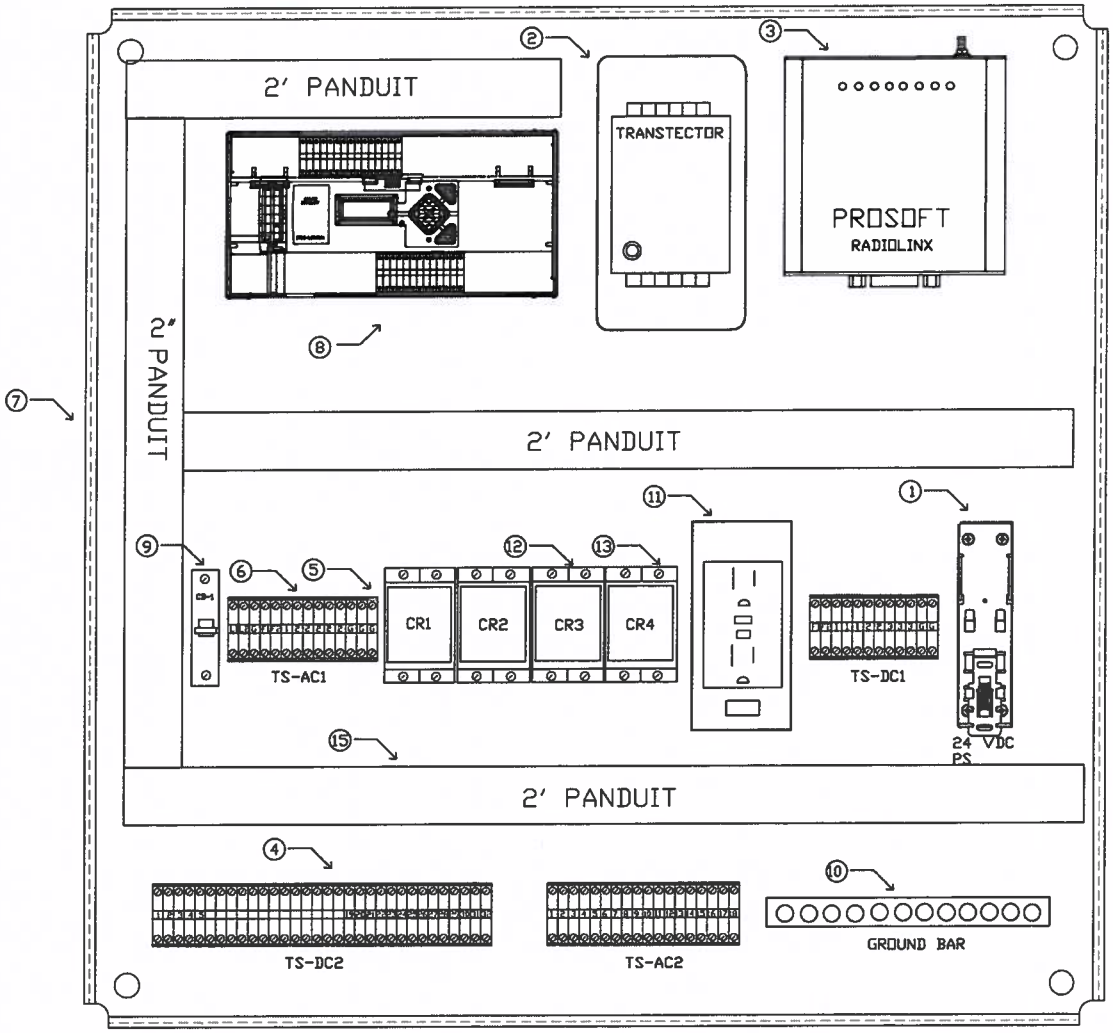

BILL OF MATERIAL				
ITEM NO.	QTY	DESCRIPTION	MANUFACTURE	PART NUMBER
1	1	POWER SUPPLY 24VDC	RHINO	PSB24-060S
2	1	AC SURGE PROTECTOR	TRANSECTOR	1104-15-000
3	1	RADIO	PROSOFT	RLX2-IFH24E
4	66	TERMINAL STRIPS	WAGO	280-601
5	5	GROUND STRIPS	WAGO	280-607
6	4	FUSE BLOCK	WAGO	281-623/281-418
7	1	BACK PLATE	ALLIED	PA2424
8	1	PLC	ALLEN BRADLEY	1766-L32BWA
9	1	CIRCUIT BREAKER	ALLEN BRADLEY	1489-M1C200
10	1	GROUND BAR	SQUARE D	PK12GTA
11	1	RECEPTACLE GFCI	ALLEN BRADLEY	1492-REC20G
12	4	RELAYS	IDEC	RH2B-UL-AC120
13	4	RELAY BASE	IDEC	SH2B-05
14		WIRE DUCT 2"x 1.5"	BETADUCT	BG2X1.5LG6.5-C

STATE OF LOUISIANA
DANIEL T. FOURESONG
License No. 35416
PROFESSIONAL ENGINEER IN CONTROL SYSTEMS ENGINEER
6/25/2015

WASTEWATER LIFT STATION
TELEMETRY SYSTEM FOR ST. JOHN THE BAPTIST PARISH, LOUISIANA
PUMP CONTROLLERS

NO.	DATE	REVISION DESCRIPTION
0	6/25/15	ISSUED FOR CONSTRUCTION

DESIGNED: ALF CHECKED: TRF APPROVED: TTF

PROCESS AND CONTROLS ENGINEERING
9 FLANDRO STREET
NEW ORLEANS, LA 70124
PACE

I.C.E. SALES & SERVICE, L.L.C.
2801 HWY. 306, SUITE B
DES ALLEMANDS, LA 70030

DRAWING
LS-46B

WEST 1ST ST LIFT STATION

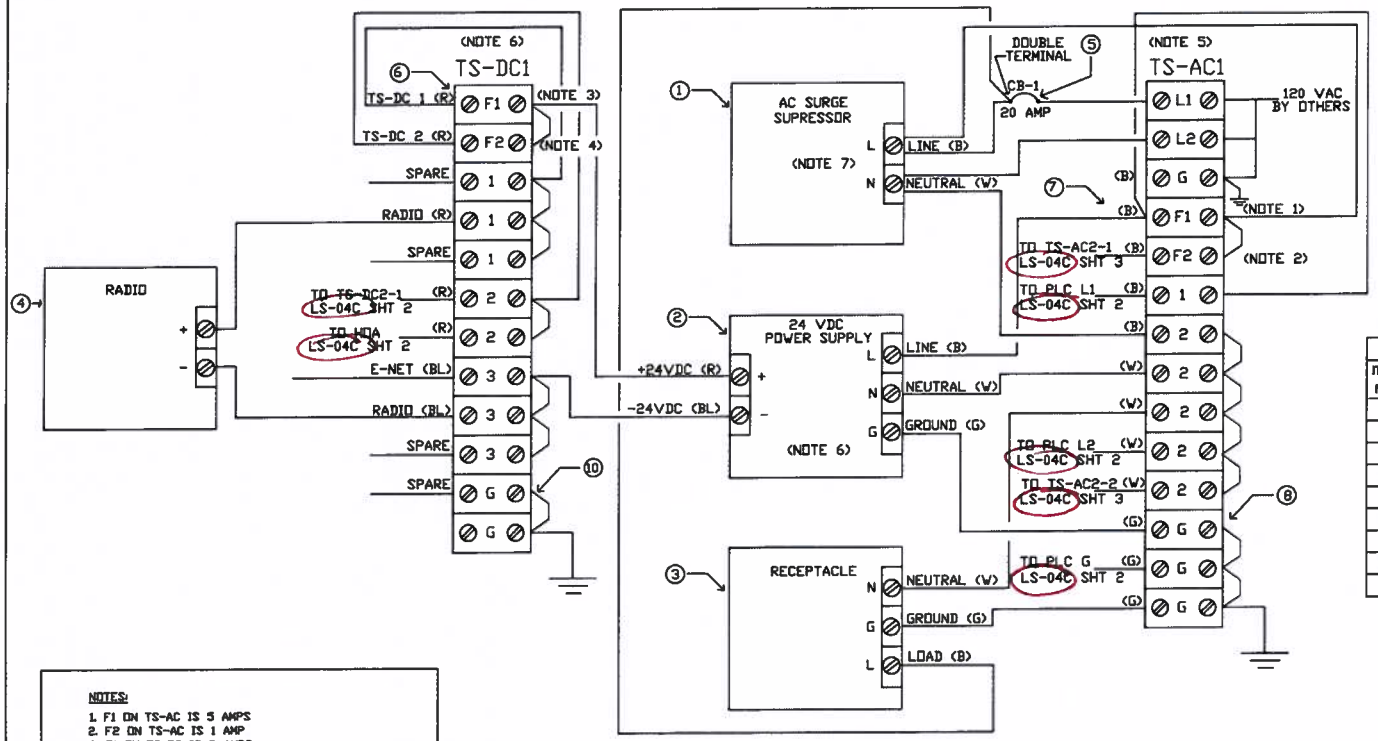

BILL OF MATERIAL				
ITEM NO.	QTY	DESCRIPTION	MANUFACTURE	PART NUMBER
1	1	AC SURGE SUPRESSOR	TRANSTECTOR	1104-15-000
2	1	POWER SUPPLY 24 VDC	RHINO	PSB24-060S
3	1	RECEPTACLE GFCI	ALLEN BRADLEY	1492-REC20G
4	1	RADIO	PROSOFT	RLX2-IFH24E
5	1	CIRCUIT BREAKER	ALLEN BRADLEY	1489-M1C200
6	16	TERMINALS	WAGO	280-601
7	4	FUSE BLOCKS	WAGO	281-623/281-418
8	6	GROUND TERMINALS	WAGE	280-607
9		14 AWG 600V THHN WIRE	REPUBLIC WIRE	

NOTES:

1. F1 ON TS-AC IS 5 AMPS
2. F2 ON TS-AC IS 1 AMP
3. F1 ON TS-DC IS 2 AMPS
4. F2 ON TS-DC IS 1 AMP
5. TOTAL AC LOAD 2.23 AMPS @ 120 VAC
6. TOTAL DC LOAD IS .2 AMPS @ 24 VDC
7. AC SURGE PROTECTOR DESIGNED FOR TWO WIRES ON EACH TERMINAL

GENERAL:

1. TERMINALS HAVE PLUG IN JUMPERS, TWO WIRES ARE NOT LANDED ON THE SAME TERMINAL
2. WIRE COLOR CODING
   120 VAC LINE - BLACK (B)
   120 VAC NEUTRAL - WHITE (W)
   24 VDC POSITIVE - RED (R)
   24 VDC NEGATIVE - BLUE (BL)
   120 VAC / 24 VDC GROUND - GREEN (G)
   ALL WIRE IS 14 AWG 600V THHN

STATE OF LOUISIANA
DANIEL T. FOGLESONG
License No. 35410
PROFESSIONAL ENGINEER IN CONTROL SYSTEMS ENGINEER
6/25/2015

WASTEWATER LIFT STATION
TELEMETRY SYSTEM FOR ST. JOHN
THE BAPTIST PARISH, LOUISIANA
PUMP CONTROLLERS

NO.	DATE	REVISION DESCRIPTION
0	6/25/15	ISSUED FOR CONSTRUCTION

DESIGNED: AJF CHECKED: FBF APPROVED: DTF

PROCESS AND CONTROLS ENGINEERING
9 FLANDERS STREET
NEW ORLEANS, LA 70124
PACE

I.C.E. SALES & SERVICE, L.L.C.
2801 HWY. 306, SUITE B
DES ALLEMANDS, LA 70030

DRAWING
LS-46C SHT 1

WEST 1ST ST LIFT STATION

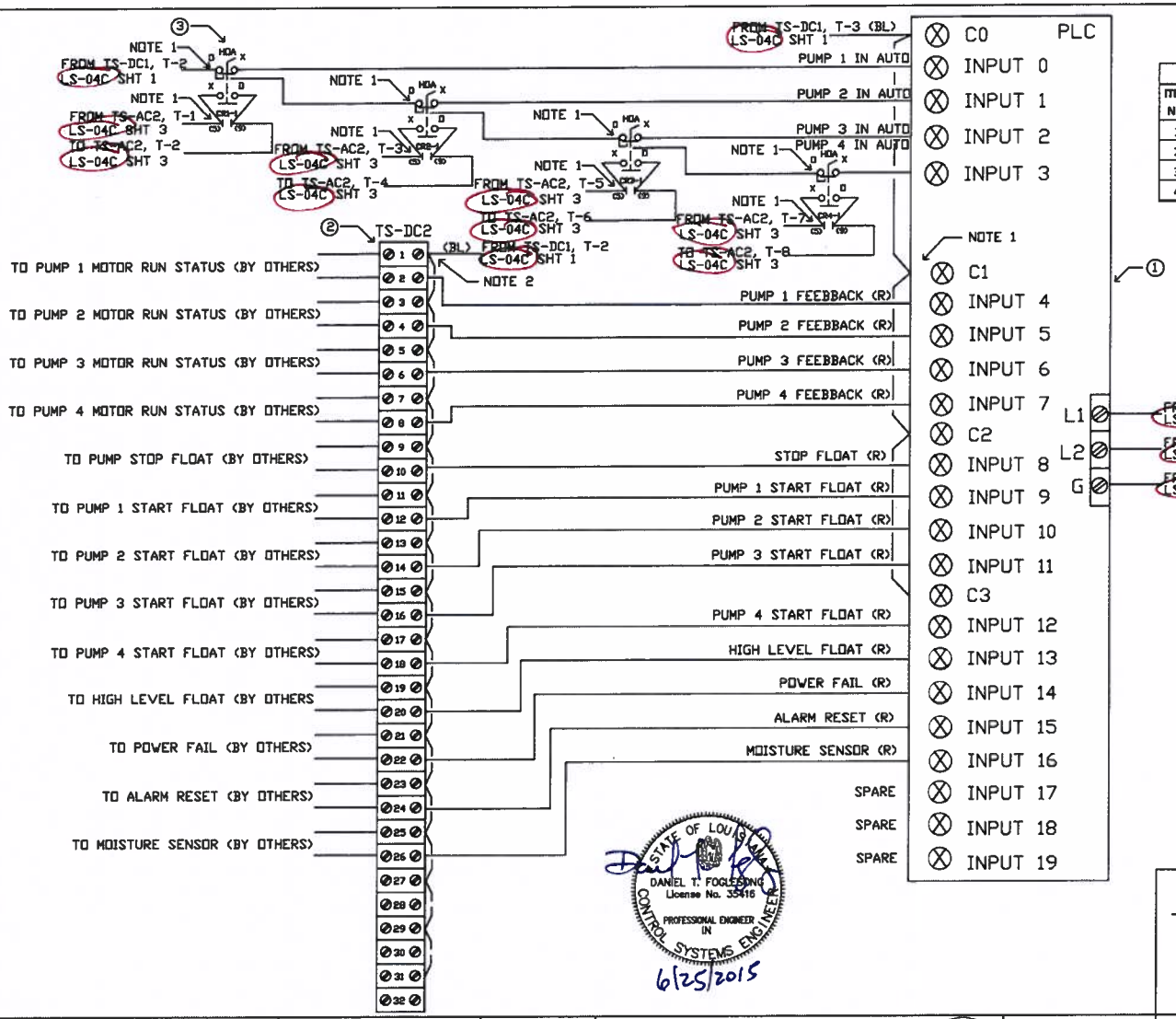

BILL OF MATERIAL				
ITEM NO.	QTY	DESCRIPTION	MANUFACTURE	PART NUMBER
1	1	MICROLOGIX 1400 PLC	ALLEN BRADLEY	1766-L32BWA
2	32	TERMINALS	WAGO	280-601
3	4	3 POSITION SWITCH (HOA)	IDEC	ASD320N
4		14 AWG 600V THHN WIRE	REPUBLIC WIRE	

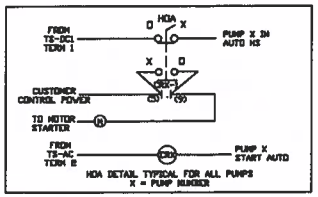

NOTES:

1. DOUBLE TERMINALS
2. TERMINALS HAVE PLUG IN JUMPERS, TWO WIRES ARE NOT LANDED ON THE SAME TERMINAL

GENERAL:

TERMINALS HAVE PLUG IN JUMPERS, TWO WIRES ARE NOT LANDED ON THE SAME TERMINAL

WIRE COLOR CODING:
120 VAC LINE - BLACK (B)
120 VAC NEUTRAL - WHITE (W)
24 VDC POSITIVE - RED (R)
24 VDC NEGATIVE - BLUE (BL)
120 VAC / 24 VDC GROUND - GREEN (G)

ALL WIRE IS 14 AWG 600V THHN

STATE OF LOUISIANA
DANIEL T. FOGLESONG
License No. 35416
PROFESSIONAL ENGINEER IN CONTROL SYSTEMS ENGINEERING
6/25/2015

WASTEWATER LIFT STATION TELEMETRY SYSTEM FOR ST. JOHN THE BAPTIST PARISH, LOUISIANA PUMP CONTROLLERS

NO.	DATE	REVISION DESCRIPTION
0	6/25/15	ISSUED FOR CONSTRUCTION

DESIGNED ALF CHECKED TDF APPROVED DDT

PROCESS AND CONTROLS ENGINEERING
9 FLAMINGO STREET
NEW ORLEANS, LA 70124
PACE

I.C.E. SALES & SERVICE, L.L.C.
2801 HWY. 306, SUITE B
DES ALLEMANDS, LA 70030

DRAWING LS-46C SHT 2

WEST 1ST ST LIFT STATION

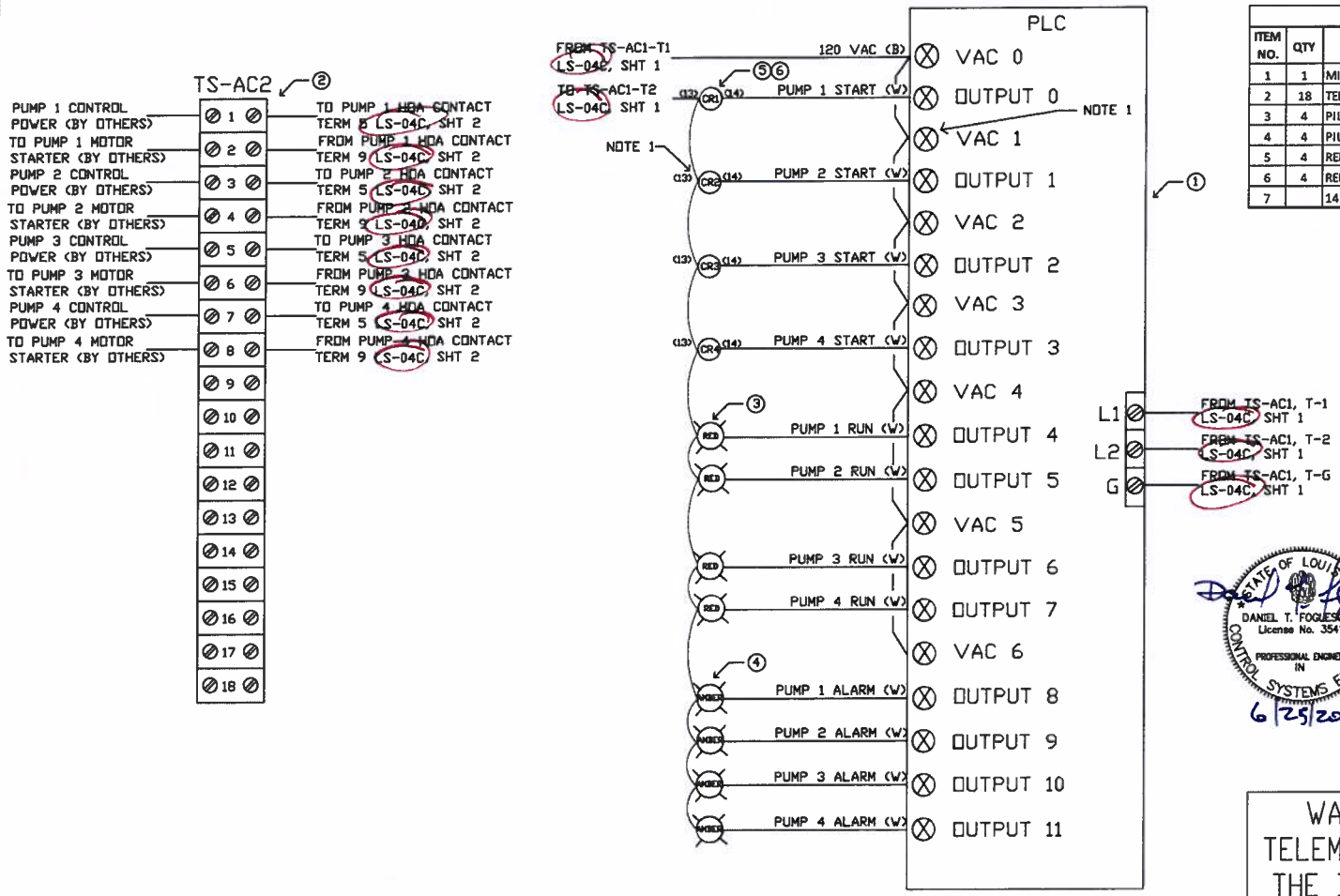

BILL OF MATERIAL				
ITEM NO.	QTY	DESCRIPTION	MANUFACTURE	PART NUMBER
1	1	MICROLOGIX 1400 PLC	ALLEN BRADLEY	1766-L32BWA
2	18	TERMINALS	WAGO	280-601
3	4	PILOT LIGHT RED	IDEC	APD199DN-R-120V
4	4	PILOT LIGHT AMBER	IDEC	APD199DN-A-120V
5	4	RELAYS	IDEC	RH2B-UL-AC120
6	4	RELAY BASE	IDEC	SH2B-05
7		14 AWG 600V THHN WIRE	REPUBLIC WIRE	

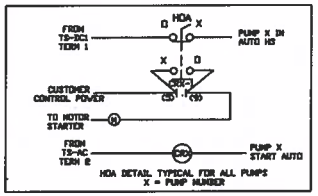

NOTES:
1. DOUBLE TERMINALS

GENERAL:
WIRE COLOR CODING:
120 VAC LINE - BLACK (B)
120 VAC NEUTRAL - WHITE (W)
24 VDC POSITIVE - RED (R)
24 VDC NEGATIVE - BLUE (BL)

ALL WIRE IS 14 AWG 600V THHN
120 VAC / 24 VDC GROUND - GREEN (G)

STATE OF LOUISIANA
DANIEL T. FOGUESONO
License No. 35416
PROFESSIONAL ENGINEER IN CONTROL SYSTEMS ENGINEER
6/25/2015

WASTEWATER LIFT STATION TELEMETRY SYSTEM FOR ST. JOHN THE BAPTIST PARISH, LOUISIANA PUMP CONTROLLERS

NO.	DATE	REVISION DESCRIPTION
0	6/25/15	ISSUED FOR CONSTRUCTION

DESIGNED: ALF DECKED: TSF APPROVED: DTF

PROCESS AND CONTROLS ENGINEERING
9 FLANDERS STREET
NEW ORLEANS, LA 70124
PACE

I.C.E. SALES & SERVICE, L.L.C.
2801 HWY. 306, SUITE B
DES ALLEMANDS, LA 70030

DRAWING LS-46C SHT 3

WEST 1ST ST LIFT STATION

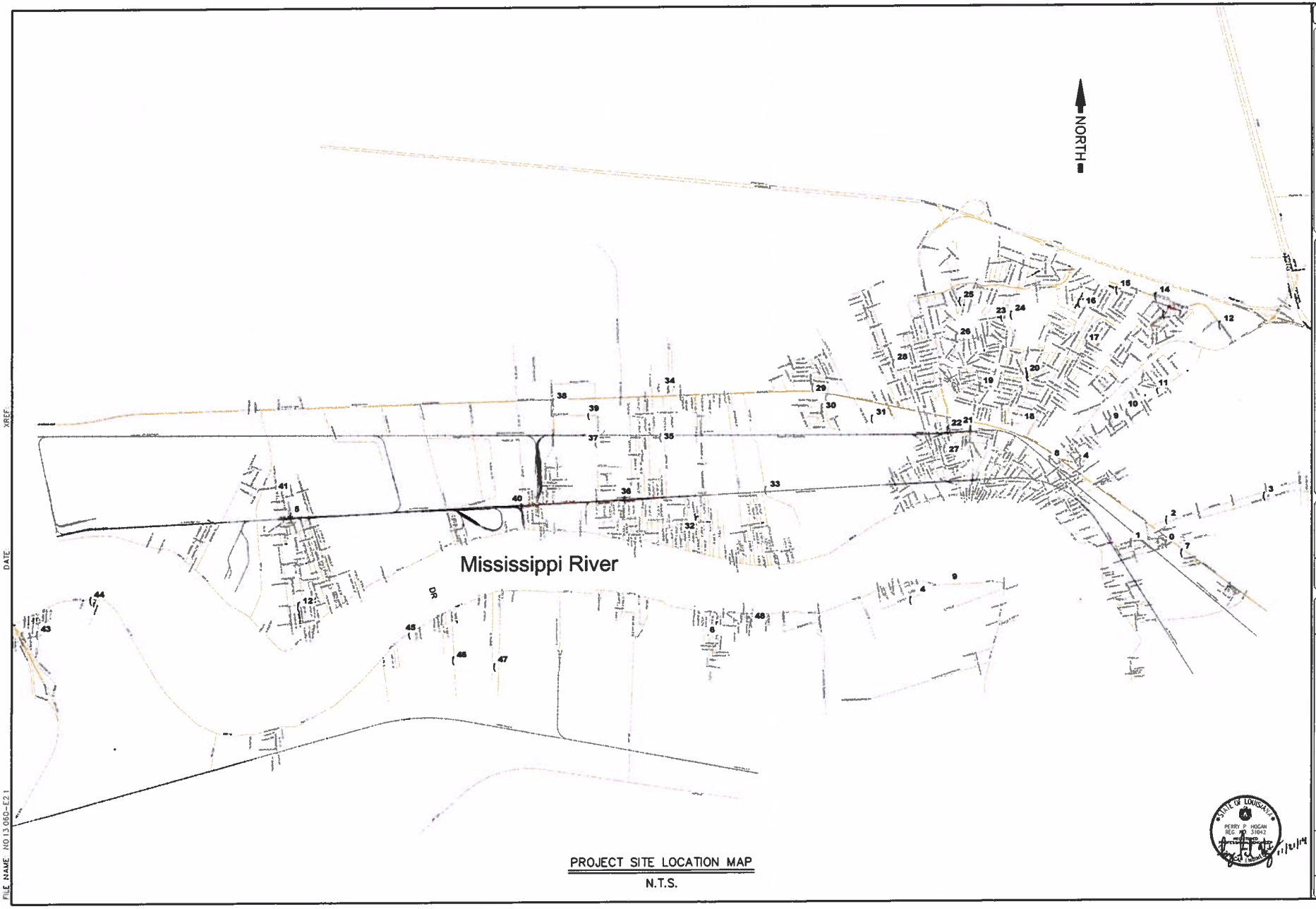

PROJECT SITE LOCATION MAP

N.T.S.

SHEET NUMBER E2.1

WASTEWATER LIFT STATION
TELEMETRY SYSTEM FOR
ST. JOHN THE BAPTIST PARISH, LOUISIANA
PROJECT SITE LOCATION MAP

BKI BURK-KLEINPETER, INC.
ENGINEERS, ARCHITECTS, PLANNERS, ENVIRONMENTAL SCIENTISTS
4176 CANAL STREET, NEW ORLEANS, LA 70119-5994
PHONE (504)486-5991 FAX (504)486-1714

BKI PROJECT NUMBER NO.13.060

DESIGNED B.M.
CHECKED P.H.
DETAILED D.R.
CHECKED C.V.
DATE 11/2014
SHEET

NO. DATE REVISION DESCRIPTION BY

XREF:
DATE:
FILE NAME NO13.060-E2.1

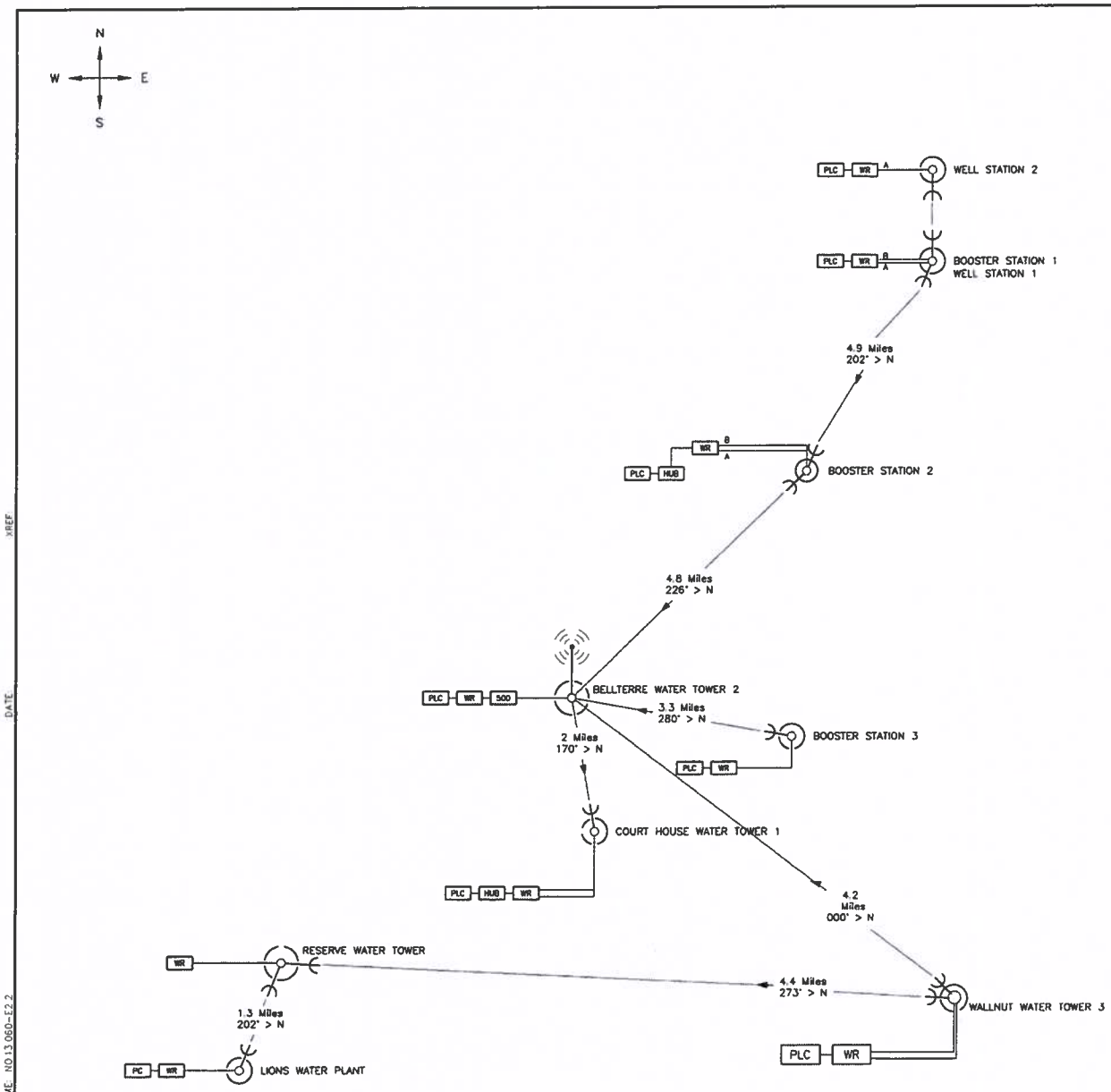

NETWORK LEGEND:

BOOSTER STATION 1 NETWORK DEVICES
PLC IP ADDRESS: 192.0.0.11
PLC MAC ADDRESS: LOCATED ON UNIT
AP-100 IP ADDRESS: 192.0.0.30
THIS UNIT (WR) IS CONFIGURED TO COMMUNICATE WITH BOOSTER STATION 2 STATION ADAPTER (WR).

BOOSTER STATION 2 NETWORK DEVICES
PLC IP ADDRESS: 192.0.0.16
PLC MAC ADDRESS: LOCATED ON UNIT
SA-100 "B" IP ADDRESS: 192.0.0.32
THIS UNIT (WR) IS CONFIGURED TO COMMUNICATE WITH BOOSTER STATION 1 ACCESS POINT (WR).
SA-100 "A" IP ADDRESS: 192.0.0.34
THIS UNIT (WR) IS CONFIGURED TO COMMUNICATE WITH TOWER 2 ACCESS POINT (WR).

BOOSTER STATION 3 NETWORK DEVICES
PLC IP ADDRESS: 192.0.0.12
PLC MAC ADDRESS: LOCATED ON UNIT
SA-100 IP ADDRESS: 192.0.0.33
THIS UNIT (WR) IS CONFIGURED TO COMMUNICATE WITH TOWER 3 ACCESS POINT (WR).

COURT HOUSE TOWER 1 NETWORK DEVICES
PLC IP ADDRESS: 192.0.0.13
PLC MAC ADDRESS: LOCATED ON UNIT
WR "A" IP ADDRESS: 192.0.0.33
THIS UNIT (WR) IS CONFIGURED TO COMMUNICATE WITH TOWER 3 ACCESS POINT (WR)
WR "B" IP ADDRESS: 192.0.0.35
THIS UNIT (WR) IS CONFIGURED TO COMMUNICATE WITH RESERVE WATER TOWER (WR).

BELLTERRE TOWER 2 NETWORK DEVICES
PLC IP ADDRESS: 192.0.0.14
PLC MAC ADDRESS: LOCATED ON UNIT
AP-100 IP ADDRESS: 192.0.0.30
THIS UNIT (WR) IS CONFIGURED TO COMMUNICATE WITH BOOSTER STATIONS 2, 3, TOWER 1 AND TOWER 3 (WR)

WALLNUT TOWER 3 NETWORK DEVICES
PLC IP ADDRESS: 192.0.0.11
PLC MAC ADDRESS: LOCATED ON UNIT
AP-100 IP ADDRESS: 192.0.0.37

RESERVE TOWER NETWORK DEVICES
AP-100 IP ADDRESS: 192.0.0.35
THIS UNIT (WR) IS CONFIGURED TO COMMUNICATE WITH TOWER 1 & LIONS WATER PLANT STATION ADAPTER (WR).

LIONS WATER PLANT NETWORK DEVICES
PC IP ADDRESS: 192.0.0.3
SA-100 IP ADDRESS: 192.0.0.37
THIS UNIT (WR) IS CONFIGURED TO COMMUNICATE WITH RESERVE WATER TOWER (WR).

NOTE: SEE PROVIDED SYSTEM MANUAL FOR NETWORK SETTINGS, CONFIGURATIONS & SECURITY

SYMBOLOGY:

PLC —PLC PROCESSOR, I/O & 512K ETHERNET ADAPTER
COM —PLC I/O ADAPTER
WR —WIRELESS RADIO
500 —AMP-500 BI-DIRECTIONAL AMPLIFIER
250 —AMP-250 BI-DIRECTIONAL AMPLIFIER
DI —24VDC 16 PT INPUT MODULE
DO —24VDC 16 PT OUTPUT MODULE
DI/DO —24VDC 10 PT INPUT / 6 PT OUTPUT MODULE
AI —24VDC 16 CH ANALOG INPUT MODULE
AI/AO —24VDC 4 CH INPUT / 2 CH OUTPUT & 24VDC 4 PT INPUT / 2 PT OUTPUT MODULE
HUB —ETHERNET HUB
LOGO —PROGRAMMABLE SMART RELAY
PC —PERSONAL COMPUTER

UNI-24 UNI DIRECTIONAL ANTENNA
OMNI-8 OMNI DIRECTIONAL ANTENNA

SYSTEM NOTES:

BOOSTER STATION ANTENNAS ARE LOCATED ON DEDICATED TOWERS.

WATER TOWER ANTENNAS ARE LOCATED ON TOWER CAT WALK RAILING.

LIONS WATER PLANT ANTENNA IS LOCATED ON NEWLY CONSTRUCTED DEDICATED TOWER.

FOR INFORMATION ONLY

STATE OF LOUISIANA
PERRY P HOGAN
REG NO 31042
REGISTERED PROFESSIONAL ENGINEER
11/21/14

SHEET NUMBER E2.2

WASTEWATER LIFT STATION
TELEMETRY SYSTEM FOR
ST. JOHN THE BAPTIST PARISH, LOUISIANA
WATER WIRELESS CONTROL I/O SYSTEM

BKI BURK-KLEINPETER, INC.
CONSULTING ENGINEERS, PLANNERS, ENVIRONMENTAL SCIENTISTS
4176 CANAL STREET, NEW ORLEANS, LA 70119-5994
PHONE (504)486-5301•FAX (504)486-1714

BKI PROJECT NUMBER NO.13.060

REVISED	B.W.	
CHECKED	P.H.	
DETAILED	D.R.	
CHECKED	C.V.	
DATE	11/2014	
SHEET	OF	

NO.	DATE	REVISION DESCRIPTION	BY

XREF

DATE

FILE NAME NO13.060-E2.2

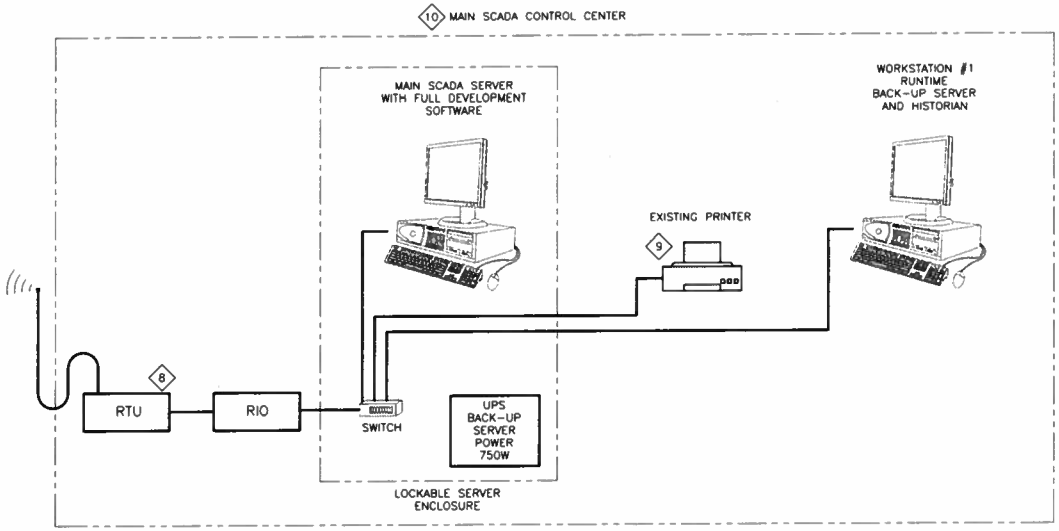

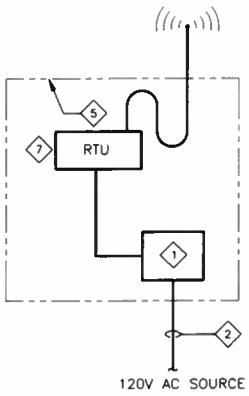

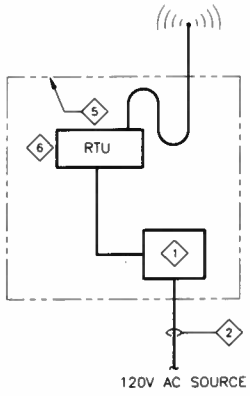

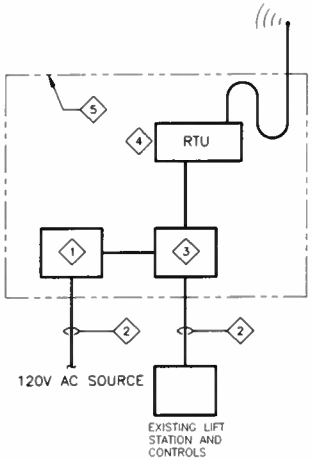

1 E2.3 E2.3 TELEMETRY SYSTEM BLOCK DIAGRAM

SCALE: N.T.S.

SHEET E2.3 NOTES:

1. BLOCK DIAGRAM IS INTENDED TO SHOW IN A GENERAL MANNER THE INTENDED TELEMETRY SYSTEM. CONTRACTOR SHALL LAYOUT AND DETERMINE TYPES AND LOCATIONS OF EQUIPMENT.
2. REFER TO SPECIFICATIONS FOR MORE DETAILED DESCRIPTION OF SYSTEM.
3. REFER TO SHEET E2.1 FOR LOCATIONS OF SITES.
4. REFER TO SHEET E2.0 FOR A SCHEDULE OF INFORMATION REGARDING EQUIPMENT LOCATED AT EACH SITE AND TELEMETRY REQUIREMENTS.
5. REFER TO SHEET E2.4 AND SPECIFICATIONS FOR FURTHER DETAILS.
6. ALL EQUIPMENT AND INTERCONNECTING CABLING SHOWN ON THIS SHEET IS TO BE FURNISHED AND INSTALLED BY THE CONTRACTOR UNLESS NOTED OTHERWISE.

SHEET E2.3 SPECIFIC NOTES:

1. POWER SUPPLY FOR PLC / WIRELESS MODULE
2. CONNECTION TO LIFT STATION BY OWNER.
3. PLC CONTROLLER / MONITOR.
4. 2.4 GHZ WIRELESS MODULE.
5. NEMA 4 TELEMETRY PACKAGE / WIRELESS MODULE ENCLOSURE.
6. INTERMEDIATE 2.4 GHZ WIRELESS REPEATER MODULE AS AS REQUIRED.
7. MAIN 2.4 GHZ WIRELESS REPEATER MODULE LOCATED AT WATER TOWER.
8. MAIN 2.4 GHZ WIRELESS MODULE LOCATED AT MAIN SCADA CONTROL CENTER.
9. EXISTING PRINTER BY OWNER. CONTRACTOR TO INTERFACE TELEMETRY SYSTEM WITH EXISTING PRINTER.
10. MAIN SCADA EQUIPMENT WILL BE LOCATED AT 434 ELM ST., LAPLACE, LA IN AN OFFICE DESIGNATED BY THE OWNER DURING CONSTRUCTION.

STATE OF LOUISIANA
PERRY P. HOGAN
REG. NO. 31042
PROFESSIONAL ENGINEER
11/12/14

SHEET NUMBER E2.3

WASTEWATER LIFT STATION TELEMETRY SYSTEM FOR ST. JOHN THE BAPTIST PARISH, LOUISIANA
TELEMETRY SYSTEM BLOCK DIAGRAM

BKI BURK-KLEINPETER, INC.
CONSULTING ENGINEERS, PLANNERS, ENVIRONMENTAL SCIENTISTS
4176 CANAL STREET, NEW ORLEANS, LA 70119-5994
PHONE (504)486-5501•FAX (504)486-1714

BKI PROJECT NUMBER NO.13.060

DESIGNED	B.M.
CHECKED	P.H.
DETAILED	P.R.
CHECKED	C.V.
DATE	11/2014
SHEET	

NO	DATE	REVISION DESCRIPTION	BY

XREF

DATE

FILE NAME NO13.060-E2.3

DUPLEX PUMP CONTROL BOX WITH WIRELESS RADIO
THE CONTROL BOX WILL BE USED TO CONTROL THE PUMPS IN THE LIFT STATION. THE BOX WILL BE ASSEMBLED AT CONTRACTORS SHOP, AND WIRED FOR FAT (FACTORY ACCEPTANCE TEST) BY ST JOHN PARISH OR AUTHORIZED REPRESENTATIVE. IN ADDITION, THE BOX WILL MEET THE FOLLOWING REQUIREMENTS:

1. THE MAIN CONTROLLER WILL BE A PLC WITH A TEMPERATURE SPEC OF 0–160 DEG F. IT SHALL CONSIST OF MINIMUM EIGHT DIGITAL INPUTS, AND EIGHT DIGITAL OUTPUTS. ALL COMMUNICATIONS TO THE PLC WILL BE ETHERNET TCP/IP MODBUS. CONTROLLER WILL BE PROGRAMMED IN MODUS FORMAT, AND WILL HAVE THE FOLLOWING FEATURES:
   - 1.1 CONFIGURATION TO ACCEPT INPUTS FOR:
     - 1.1.1 LOW FLOAT FOR PUMP STOP.
     - 1.1.2 PUMP 1, AND PUMP 2 START FLOATS.
     - 1.1.3 HIGH LEVEL ALARM FLOAT.
     - 1.1.4 MOISTURE SENSOR (DRY WELL).
     - 1.1.5 POWER FAIL CONTACT.
     - 1.1.6 ALARM RESET.
   - 1.2 ADJUSTABLE SET POINTS FOR EACH PUMP START AND STOP LEVEL SET POINTS.
   - 1.3 TIMERS TO RECORD EACH PUMP CYCLE, AND TOTAL RUN TIME.
   - 1.4 TIMER FOR SYSTEM ALARM FOR EXTENDED PUMP RUN TIME.
   - 1.5 SYSTEM SELECTION OF PUMP ROTATION WITH EACH RUN CYCLE.
   - 1.6 CONFIGURATION OF DIGITAL OUTPUT FOR SYSTEM ALARM INCLUDING:
     - 1.6.1 HIGH LEVEL FLOAT.
     - 1.6.2 PUMP RUN TIME LIMIT.
     - 1.6.3 MOISTURE DETECTION (DRY WELL).
     - 1.6.4 POWER FAIL.
     - 1.6.5 PUMP ROTATION ALARM.
2. THE CONTROLLER WILL BE HOUSED IN A FIBERGLASS ENCLOSURE (NEMA 4).
3. THE ENCLOSURE WILL BE PRE-WIRED FOR FIELD INSTALLATION USING WEIDMULLER SAK4 OR EQUAL TERMINAL BLOCKS, WITH FUSE TERMINAL BLOCKS FOR SYSTEM PROTECTION.
4. ALL WIRE USED MUST THHN OR THWN, AND SIZED PROPERLY FOR APPLICATION.
5. EACH PUMP WILL BE CONTROLLED BY THE CONTROLLER WITH THE FOLLOWING FEATURES:
   - 5.1 EACH PUMP WILL HAVE SEALED SOLID STATE RELAY FOR STARTER INTERFACE.
   - 5.2 EACH PUMP WILL HAVE A SEALED HAND OFF AUTO SWITCH.
   - 5.3 EACH PUMP WILL HAVE A SEALED RUN, AND ALARM LIGHT.
6. THE SYSTEM WILL HAVE A MINIMUM OF A 7" COLOR TOUCH SCREEN MMI FOR USER INTERFACE, PROGRAMMED TO DISPLAY I/O FROM SECTIONS 1.1, 1.2, 1.3, 1.4, 1.5, AND 1.6.
7. THE SYSTEM WILL HAVE A WIRELESS RADIO COMMUNICATING IN A 2.4 GZ RANGE WITH A FREQUENCY HOPPING CONFIGURATION. THIS RADIO WILL BE HOUSED WITHIN THE FIBERGLASS ENCLOSURE MEETING A TEMPERATURE SPEC OF 0–160 DEG.
8. THE SYSTEM WILL INCLUDE A 2.4 GZ ANTENNA CAPABLE OF COMMUNICATING UP TO 10 MILES, WITH 50' OF WIRE, LIGHTNING ARRESTOR, AND CONNECTORS.

QUADPLEX PUMP CONTROL BOX WITH WIRELESS RADIO
THE CONTROL BOX WILL BE USED TO CONTROL THE PUMPS IN THE LIFT STATION. THE BOX WILL BE ASSEMBLED AT CONTRACTORS SHOP, AND WIRED FOR FAT (FACTORY ACCEPTANCE TEST) BY ST JOHN PARISH OR AUTHORIZED REPRESENTATIVE. IN ADDITION, THE BOX WILL MEET THE FOLLOWING REQUIREMENTS:

1. THE MAIN CONTROLLER WILL BE A PLC WITH A TEMPERATURE SPEC OF 0–160 DEG F. IT SHALL CONSIST OF MINIMUM SIXTEEN DIGITAL INPUTS, AND SIXTEEN DIGITAL OUTPUTS. ALL COMMUNICATIONS TO THE PLC WILL BE ETHERNET TCP/IP MODBUS. CONTROLLER WILL BE PROGRAMMED IN MODUS FORMAT, AND WILL HAVE THE FOLLOWING FEATURES:
   - 1.1 CONFIGURATION TO ACCEPT INPUTS FOR:
     - 1.1.1 LOW FLOAT FOR PUMP 1, AND PUMP 2 STOP.
     - 1.1.2 LOW FLOAT FOR PUMP 3, AND PUMP 4 STOP.
     - 1.1.3 PUMP 1, AND PUMP 2 START FLOATS.
     - 1.1.4 PUMP 3, AND PUMP 4 START FLOATS.
     - 1.1.5 HIGH LEVEL ALARM FLOAT.
     - 1.1.6 MOISTURE SENSOR (DRY WELL).
     - 1.1.7 POWER FAIL CONTACT.
     - 1.1.8 ALARM RESET.
   - 1.2 ADJUSTABLE SET POINTS FOR EACH PUMP START AND STOP LEVEL SET POINTS.
   - 1.3 TIMERS TO RECORD EACH PUMP CYCLE, AND TOTAL RUN TIME.
   - 1.4 TIMER FOR SYSTEM ALARM FOR EXTENDED PUMP RUN TIME.
   - 1.5 SYSTEM SELECTION OF PUMP ROTATION WITH EACH RUN CYCLE.
   - 1.6 CONFIGURATION OF DIGITAL OUTPUT FOR SYSTEM ALARM INCLUDING:
     - 1.6.1 HIGH LEVEL FLOAT.
     - 1.6.2 PUMP RUN TIME LIMIT.
     - 1.6.3 MOISTURE DETECTION (DRY WELL).
     - 1.6.4 POWER FAIL.
     - 1.6.5 PUMP ROTATION ALARM.
2. THE CONTROLLER WILL BE HOUSED IN A FIBERGLASS ENCLOSURE (NEMA 4).
3. THE ENCLOSURE WILL BE PRE-WIRED FOR FIELD INSTALLATION USING WEIDMULLER SAK4 OR EQUAL TERMINAL BLOCKS, WITH FUSE TERMINAL BLOCKS FOR SYSTEM PROTECTION.
4. ALL WIRE USED MUST THHN OR THWN, AND SIZED PROPERLY FOR APPLICATION.
5. EACH PUMP WILL BE CONTROLLED BY THE CONTROLLER WITH THE FOLLOWING FEATURES:
   - 5.1 EACH PUMP WILL HAVE SEALED SOLID STATE RELAY FOR STARTER INTERFACE.
   - 5.2 EACH PUMP WILL HAVE A SEALED HAND OFF AUTO SWITCH.
   - 5.3 EACH PUMP WILL HAVE A SEALED RUN, AND ALARM LIGHT.
6. THE SYSTEM WILL HAVE A MINIMUM OF A 7" COLOR TOUCH SCREEN MMI FOR USER INTERFACE, PROGRAMMED TO DISPLAY I/O FROM SECTIONS 1.1, 1.2, 1.3, 1.4, 1.5, AND 1.6.
7. THE SYSTEM WILL HAVE A WIRELESS RADIO COMMUNICATING IN A 2.4 GZ RANGE WITH A FREQUENCY HOPPING CONFIGURATION. THIS RADIO WILL BE HOUSED WITHIN THE FIBERGLASS ENCLOSURE MEETING A TEMPERATURE SPEC OF 0–160 DEG.
8. THE SYSTEM WILL INCLUDE A 2.4 GZ ANTENNA CAPABLE OF COMMUNICATING UP TO 10 MILES, WITH 50' OF WIRE, LIGHTNING ARRESTOR, AND CONNECTORS.

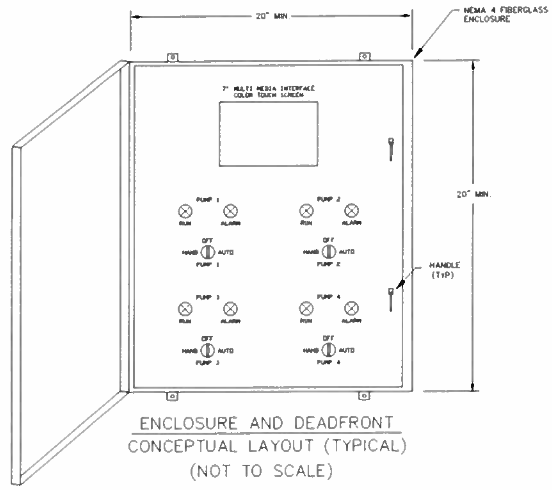

ENCLOSURE AND DEADFRONT
CONCEPTUAL LAYOUT (TYPICAL)
(NOT TO SCALE)

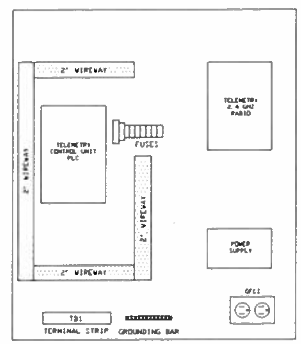

ENCLOSURE BACKPLATE
CONCEPTUAL LAYOUT (TYPICAL)
(NOT TO SCALE)

CONTROL TERMINAL STRIP (TB1) IN LIFT STATION CONTROL PANEL

Terminal	Function
1	PUMP 1 - LOW FLOAT
2	PUMP 1 - LOW FLOAT
3	PUMP 2 - STOP
4	PUMP 2 - STOP
5	PUMP 1 - START FLOAT
6	PUMP 1 - START FLOAT
7	PUMP 2 - START FLOAT
8	PUMP 2 - START FLOAT
9	HIGH LEVEL ALARM FLOAT
10	HIGH LEVEL ALARM FLOAT
11	POWER FAIL CONTACT
12	POWER FAIL CONTACT
13	ALARM RESET
14	ALARM RESET
15	PUMP 3 - LOW FLOAT
16	PUMP 3 - LOW FLOAT
17	PUMP 4 - STOP
18	PUMP 4 - STOP
19	PUMP 3 - START FLOAT
20	PUMP 3 - START FLOAT
21	PUMP 4 - START FLOAT
22	PUMP 4 - START FLOAT
23	MOISTURE SENSOR
24	MOISTURE SENSOR
25	
26	
27	
28	
29	
30	
31	
32	
33	
34	
35	
36	
37	
38	
39	
40	

GENERAL:

CONTRACTOR SHALL BUILD ONE COMPLETE AND FUNCTIONAL LIFT STATION CONTROL PANEL THAT SHALL BE DELIVERED TO THE OWNER/ENGINEER FOR REVIEW AND APPROVAL PRIOR TO COMPLETION OF REMAINING PANELS. CONTRACTOR SHALL SUBMIT SHOP DRAWINGS OWNER/ENGINEER REVIEW AND APPROVAL FOR ALL COMPONENTS TO BE USED IN THE CONSTRUCTION OF THE LIFT STATION CONTROL PANEL PRIOR TO CONSTRUCTION.

THE LIFT STATION CONTROL PANEL SHALL INCLUDE BUT NOT LIMITED TO THE FOLLOWING:

1. HOFFMAN FIBERGLASS NEMA 4 ENCLOSURE OR EQUAL. ENCLOSURE SIZE SHALL BE DETERMINED BY THE CONTRACTOR TO INCLUDE ALL CONTROL PANEL COMPONENTS BUT SHALL BE A MINIMUM SIZE OF 20"W X 20"H X 8"D. ENCLOSURE SHALL HAVE AN INTERNAL DEAD FRONT HINGED DOOR THAT CONTAINS A MINIMUM OF TWO LATCHES.
2. PLC CONTROLLER INCLUDING ALL REQUIRED HARDWARE AND SOFTWARE PROGRAMMING.
3. 120 VOLT TO 12 VDC POWER SUPPLY, SQUARE D OR EQUAL.
4. GROUND BAR WITH 12 TERMINALS, SQUARE D PK12GTA OR EQUAL.
5. 7" MMI COLOR TOUCH SCREEN.
6. 2.4 GHZ WIRELESS RADIO.
7. 2.4 GHZ ANTENNA.
8. 20 AMP GFCI RECEPTACLE, LEVITON 8898 OR EQUAL.
9. 30MM INDICATING LIGHTS, SQ-D, 9001 SKP38R9 OR EQUAL, RED-RUN, ORANGE-ALARM.
10. HAND-OFF-AUTO SWITCH, SQUARE D OR EQUAL.
11. TERMINAL STRIP WITH A QUANTITY OF TERMINAL STRIPS AS REQUIRED PLUS 25% SPARE BUT NO LESS THAN 40 TERMINAL BLOCKS.
12. 12 VOLT FUSES AND FUSE TERMINAL BLOCKS, DIN RAIL MOUNTED, WEIDMULLER SAK4 OR EQUAL.
13. 120 VOLT FUSE AND FUSE TERMINAL BLOCKS, DIN RAIL MOUNTED, WEIDMULLER SAK4 OR EQUAL.
14. TRANSIENT FILTER SHIELD, TFS001-02, DATA FLOW OR EQUAL.
15. 120 VOLT SURGE SUPPRESSOR, DITEK DFS 005-0061 OR EQUAL.
16. BROADBAND SURGE PROTECTOR, POLYPHASER IS-B50LN-C2-MA OR EQUAL.
17. SOLID STATE RELAYS AS REQUIRED TO INTERFACE EXISTING MOTOR CONTROLS AT EACH LIFT STATION SITE.
18. 2" WIREWAY WITH COVERS, PANDUIT OR EQUAL TO CONCEAL/TRAIN ALL WIRING.
19. CONTRACTOR SHALL COMPLETE THE INSTALLATION OF ALL WIRING WITHIN THE CONTROL CABINET.

NOTES:

1. OWNER SHALL PROVIDE A DEDICATED 120VAC CIRCUIT AND TERMINATE ON CONTRACTOR PROVIDED FUSED BLOCK INSIDE THE CONTROL ENCLOSURE. OWNER SHALL TERMINATE ALL CONTROL RACEWAY AND WIRING FROM EXISTING LIFT STATION CONTROL DEVICES INCLUDING BUT NOT LIMITED TO LEVEL SWITCHES AND MOTOR START/STOP SIGNALS.
2. THE CONTRACTOR SHALL FURNISH AND INSTALL A COMPLETE TELEMETRY CONTROL SYSTEM INCLUDING TELEMETRY CONTROL UNIT EQUIPMENT AND ANTENNA. CONTRACTOR SHALL PERFORM A RADIO PATH SURVEY AND ASSOCIATED ANALYSIS TO DETERMINE DESIGN PARAMETER FOR A FUNCTIONAL SYSTEM DESIGN AND INSTALLATION OF THE TELEMETRY CONTROL SYSTEM. THE CONTRACTOR SHALL INCLUDE ALL ASSOCIATED COSTS IN HIS/HER BID PRICE INCLUDING ANY MISCELLANEOUS MATERIAL REQUIRED TO COMPLETE THE INSTALLATION.
3. THE CONTRACTOR SHALL FURNISH AND INSTALL THE COMPLETE LIFT STATION CONTROL PANEL AND ASSOCIATED EQUIPMENT. THE CONTROL PANEL SHALL INCLUDE ALL ENGINEERING, FABRICATION AND TESTING.
4. ENCLOSURE BACKPLATE SHOWN DOES NOT INDICATE ALL EQUIPMENT TO BE MOUNTED ON BACKPLATE. CONTRACTOR TO SUBMIT A DETAILED ENCLOSURE BACKPLATE WITH ALL EQUIPMENT LOCATED WITH REQUIRED SHOP DRAWINGS.
5. DEAD FRONT PANELS SHALL BE CONSISTENT FOR ALL TWO OR FOUR PUMP CONTROLLERS WITH REGARDS TO LOCATIONS OF SWITCHES, PILOT LIGHTS AND TOUCHSCREEN. FOR CONTROLLERS WITHOUT TOUCHSCREENS, THE LOCATION SHALL BE RESERVED FOR POSSIBLE FUTURE ADDITION OF A TOUCHSCREEN.

NO	DATE	REVISION DESCRIPTION	BY

DESIGNED B.M. CHECKED P.H. DETAILED D.R. CHECKED C.V. DATE 11/2014 SHEET OF

BKI BURK-KLEINPETER, INC.
ENGINEERS, ARCHITECTS, PLANNERS, ENVIRONMENTAL SCIENTISTS
4176 CANAL STREET, NEW ORLEANS, LA 70119-5994
PHONE (504)486-5901•FAX (504)488-1714
BKI PROJECT NUMBER NO.13 060

WASTEWATER LIFT STATION TELEMETRY SYSTEM FOR ST. JOHN THE BAPTIST PARISH, LOUISIANA PUMP CONTROLLERS

SHEET NUMBER E2.4

XREF: DATE FILE NAME: 3 6 E2.4