SHEET NUMBER 1

ST. JOHN THE BAPTIST PARISH
SHELL POTABLE WATERLINE

PREPARED FOR
ST. JOHN THE BAPTIST
PARISH COUNCIL

VICINITY MAP

START PROJECT — END PROJECT

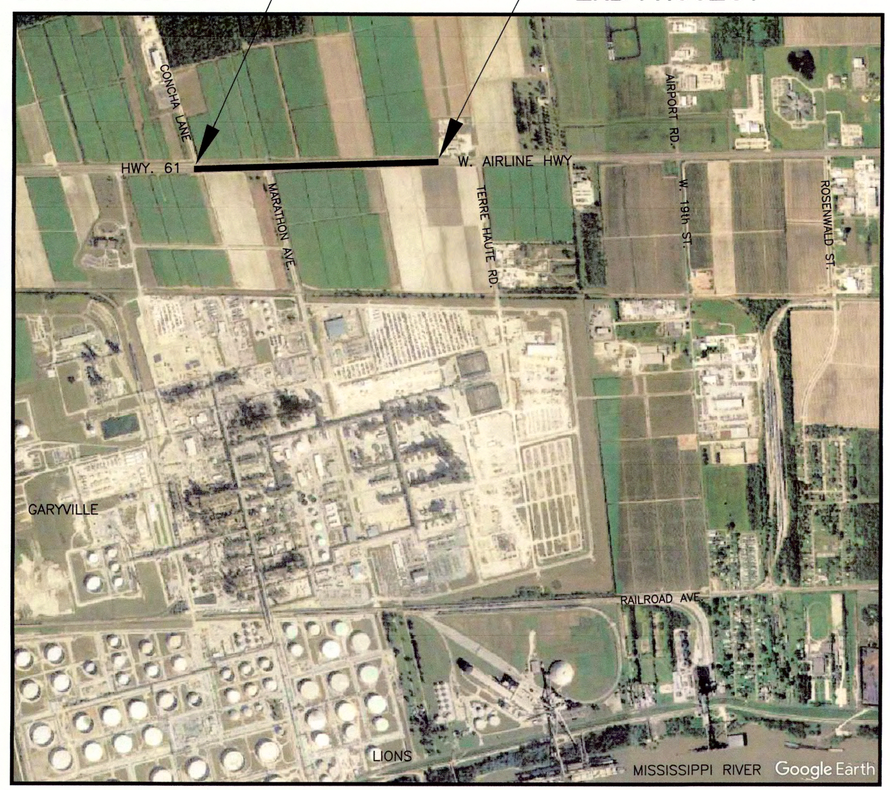

LAYOUT MAP

1000' 0 1000' 2000' 3000' 4000'

SCALE: 1" = 1000'

INDEX OF DRAWINGS

SHEET NO.	TITLE
1	TITLE SHEET
2	GENERAL NOTES, LEGEND & ABBREVIATIONS
3	KEYMAP
4-10	PLAN PROFILE
11	MISCELLANEOUS DETAILS
11	TOTAL

NATALIE ROBOTTOM	PARISH PRESIDENT
LARRY SORAPURU, JR.	COUNCILMAN AT LARGE, DIVISION A
JACLYN HOTARD	COUNCILWOMAN AT LARGE, DIVISION B
KURT BECNEL	COUNCILMAN DISTRICT I
JULIA REMONDET	COUNCILMAN DISTRICT II
LENNIX MADERE, JR.	COUNCILMAN DISTRICT III
MARVIN PERRILLOUX	COUNCILMAN DISTRICT IV
MICHAEL WRIGHT	COUNCILMAN DISTRICT V
LARRY SNYDER	COUNCILMAN DISTRICT VI
THOMAS MALIK	COUNCILMAN DISTRICT VII

RECOMMENDED FOR APPROVAL

STATE OF LOUISIANA
Constantine F. Nicoladis
REG. No. 27095
REGISTERED
PROFESSIONAL ENGINEER
IN
CIVIL ENGINEERING

7/10/18

CONSTANTINE F. NICOLADIS, P.E. — DATE
N-Y ASSOCIATES, INC.

N-Y ASSOCIATES, INC.
ENGINEERS • ARCHITECTS • PLANNERS
PROGRAM & PROJECT MANAGERS
2750 LAKE VILLA DRIVE
METAIRIE, LOUISIANA 70002
PHONE(504)885-0500
FAX(504)885-0595

N-Y JOB NO. 17007

JULY, 2018

SCHEDULE OF REVISIONS

DATE	REVISION	DATE	REVISION

GENERAL NOTES

1. CONTRACTOR SHALL BE RESPONSIBLE FOR LAYING OUT THE WORK AND VERIFYING ALL MEASUREMENTS, GRADES AND ELEVATIONS PRIOR TO BEGINNING OF CONSTRUCTION. PROJECT VERTICAL AND HORIZONTAL CONTROLS ARE INDICATED ON THE PLANS. IT SHALL BE THE RESPONSIBILITY OF THE CONTRACTOR TO ESTABLISH BASE LINE AND T.B.M.'S FOR CONSTRUCTION PURPOSES. ALL CONSTRUCTION SHALL TAKE PLACE WITHIN EXISTING LOUISIANA DEPT. OF TRANSPORTATION AND DEVELOPMENT (DOTD) RIGHT-OF-WAY.
2. THE LOCATIONS OF UNDERGROUND AND OTHER NONVISIBLE UTILITIES SHOWN HEREON HAVE BEEN DETERMINED FROM DATA EITHER FURNISHED BY THE AGENCIES CONTROLLING SUCH DATA AND/OR EXTRACTED FROM RECORDS MADE AVAILABLE BY THE AGENCIES CONTROLLING SUCH RECORDS. WHERE FOUND, THE SURFACE FEATURES OF LOCATIONS ARE SHOWN. THE ACTUAL NONVISIBLE LOCATIONS MAY VARY FROM THOSE SHOWN HEREIN. THE CONTRACTOR MUST VERIFY LOCATIONS AND TAKE THE NECESSARY PRECAUTIONS TO PREVENT DAMAGE. IT SHALL BE THE RESPONSIBILITY OF THE CONTRACTOR TO CONTACT THE VARIOUS UTILITY COMPANIES (TELEPHONE, GAS, WATER, ETC.) TO OBTAIN THE LOCATIONS, WHERE POSSIBLE, OF THE VARIOUS HOUSE SERVICES AND TO PROTECT THESE LINES DURING CONSTRUCTION. PRIOR TO EXCAVATION THE CONTRACTOR SHALL CALL LOUISIANA ONE CALL (1-800-272-3020) TO MARK THE CONSTRUCTION AREA.
3. THE CONTRACTOR SHALL BE RESPONSIBLE FOR DETERMINING THE EXACT LOCATION, DEPTH AND SIZE OF EXISTING UNDERGROUND UTILITIES AND STRUCTURES PRIOR TO CONSTRUCTION AND SHALL BE LIABLE FOR REPAIR & PAYMENT FOR ANY DAMAGES OR DOWNTIME CAUSED BY FAILURE TO COMPLY WITH THESE REQUIREMENTS. ANY CONFLICTS BETWEEN EXISTING UTILITIES AND PROPOSED IMPROVEMENTS SHOULD BE REPORTED TO THE ENGINEER FOR COORDINATION.
4. CONTRACTOR SHALL SUBMIT A DETAILED EXCAVATION AND SHEETING / BRACING PLAN FOR REVIEW AND APPROVAL BY THE ENGINEER PRIOR TO BEGINNING ANY CONSTRUCTION.
5. THE CONTRACTOR IS RESPONSIBLE TO DESIGN, PROVIDE, INSTALL AND MAINTAIN TEMPORARY CONSTRUCTION SHEETING, SHORING, BRACING AND DEWATERING SYSTEMS REQUIRED TO COMPLETE THE WORK IN A CONTINUOUS SAFE MANNER. THE CONTRACTOR SHALL ASSUME ALL RESPONSIBILITY FOR THE STABILITY AND ADEQUACY OF SHEETING, SHORING, BRACING AND DEWATERING SYSTEMS CONSTRUCTED BY HIM AND ALL COSTS FOR DAMAGES RESULTING FROM ANY FAILURE THEREOF.
6. THE CONTRACTOR SHALL BE RESPONSIBLE FOR REPLACING ANY ROADWAYS, DRIVEWAYS, SIDEWALKS, LAWNS, SHRUBS, TREES OR OTHER SURFACE FEATURES DAMAGED BY CONSTRUCTION ACTIVITIES TO THEIR ORIGINAL CONDITIONS OR BETTER, AT NO EXPENSE TO THE OWNER.
7. THE CONTRACTOR SHALL BE RESPONSIBLE TO MAINTAIN ACCESS TO COMMERCIAL AND RESIDENTIAL DRIVEWAYS AT ALL TIMES DURING THE CONSTRUCTION OF THE PROJECT.
8. ALL WORK AROUND HIGH VOLTAGE POWER LINES SHALL BE IN ACCORDANCE WITH OSHA AND ENTERGY REQUIREMENTS.
9. CONTRACTOR TO PROTECT EXISTING WATER MAIN, SERVICES, GAS LINES, TELEPHONE LINES, SEWER LINES, OVERHEAD POWER AND CABLE LINES.
10. CONTRACTOR MUST CONTACT ST. JOHN PARISH DEPARTMENT OF PUBLIC WORKS (985-652-4815), ST. JOHN PARISH UTILITIES DEPARTMENT (985-651-6800), AND ST. JOHN PARISH PLANNING AND ZONING (985-651-5565), PRIOR TO THE COMMENCEMENT OF CONSTRUCTION.
11. ALL SIGNS REQUIRING REMOVAL TO CONSTRUCT THE WATERLINE SHALL BE REPLACED BY THE CONTRACTOR AT NO DIRECT PAY.

LEGEND

- EXIST. (FINE LINE)
- NEW CONSTRUCTION (BROAD LINE)
- BASELINE
- APPARENT RIGHT OF WAY
- CROSS CUT IN CONCRETE
- T.B.M.
- MONUMENT
- IRON PIPE OR IRON ROD
- REQ'D. CONCRETE
- REQ'D. NEW GRAVEL
- EXIST. TO BE REMOVED
- REQ'D. ASPHALT
- REQ'D. COLD MILL AND OVERLAY
- EXIST. CATCH BASIN (CURB INLET)
- EXIST. DROP INLET (DRAIN INLET)
- 12" — EXIST. DRAIN LINE/MANHOLE
- 8"S — EXIST. SEWER LINE/MANHOLE
- 6" — EXIST. WATER/MANHOLE
- REQ'D. WATER MAIN
- GAS — EXIST. GAS
- REQ'D. WATER VALVE AND COVER
- TO BE REMOVED
- EXIST. FIRE HYDRANT
- REQ'D. FIRE HYDRANT
- BUILDING
- CABLE TV BOX
- CULVERT
- COMMUNICATIONS LINE/MANHOLE
- DRAIN CLEANOUT
- EXIST. ELECTRIC LINE/MANHOLE
- ENTERGY LIGHTS
- FENCE LINE
- GAS VALVE
- HEDGE
- MAILBOX
- PP DEADMAN
- POWER TRANSFORMER
- SEWER CLEANOUT
- SIGN
- TELEPHONE INTERFACE BOX
- TRAFFIC CONTROL BOX
- TRAFFIC POWER VAULT
- TRAFFIC LIGHT STANDARD
- TRAFFIC SIGNAL POLE
- TRAFFIC SIGNAL PULL BOX
- TREE
- TELEPHONE MANHOLE
- TV — UNDERGROUND TELEVISION CABLE
- OHE — UTILITY POLE/OVERHEAD LINES ELECTRIC, TELEPHONE, CABLE TV
- UGE — UNDERGROUND ELECTRIC LINE
- WATER METER
- WATER VALVE

ABBREVIATIONS

CONC.	CONCRETE
CLR.	CLEAR/CLEARANCE
DWY.	DRIVEWAY
EXIST.	EXISTING
F.H.	FIRE HYDRANT
INV.	INVERT
MIN.	MINIMUM
O.D.	OUTSIDE DIAMETER
OFF.	OFFSET
REQ'D.	REQUIRED
R/W	RIGHT OF WAY
STA.	STATION
S/W	SIDEWALK
TOP	TOP OF PIPE
TYP.	TYPICAL

RESTRAINED JOINT LENGTHS

FITTING TYPE	NOMINAL SIZE (INCHES)	(LENGTH TO BE RESTRAINED ON EACH SIDE OF FITTING) LENGTH 1 (FEET)	LENGTH 2 (FEET)	LOW SIDE DEPTH (FEET)
HORIZONTAL BEND 45°	12	8		
DEAD END	12	55		
VALVE	12	55		
VERTICAL BEND 45°	12	23	14	2.0
VERTICAL BEND 45°	12	23	12	2.5
VERTICAL BEND 22.5°	12	11	7	2.0
VERTICAL BEND 22.5°	12	11	6	2.5
VERTICAL BEND 22.5°	12	11	5	3.0
VERTICAL BEND 22.5°	12	11	4	3.5
VERTICAL BEND 22.5°	12	11	4	4.0

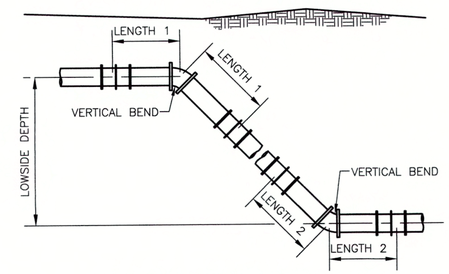

VERTICAL BEND DETAIL
N.T.S.

STATE OF LOUISIANA
FRED C. MORTALI
License No. 35111
PROFESSIONAL ENGINEER
7/11/18

PROJECT NO. 17007

NO.	DATE	REVISION DESCRIPTION

MORTALI ASSOCIATES, INC.
ENGINEERS • ARCHITECTS • PLANNERS
PROGRAM & PROJECT MANAGERS

DSGN. F.M.
DR. A.H.M.
CKD. F.M.
APPD. C.F.N.

SHELL POTABLE WATERLINE
ST. JOHN THE BAPTIST PARISH, LOUISIANA

GENERAL NOTES, LEGEND & ABBREVIATIONS

DATE: JULY, 2018

SHEET NO. 2 OF 11

N

KEYMAP

200' 0 200' 400' 600' 800'

SCALE: 1" = 200'

STATE OF LOUISIANA
FRED C. MORTALI
License No. 35111
PROFESSIONAL ENGINEER
4/20/18

PROJECT NO.
17007

NO.	DATE	REVISION DESCRIPTION

ASSOCIATES, INC.
ENGINEERS • ARCHITECTS • PLANNERS
PROGRAM & PROJECT MANAGERS

ST. JOHN THE BAPTIST PARISH ★ LOUISIANA

DSGN. F.M.
DR. A.H.M.
CKD. F.M.
APPD. C.F.N.

SHELL POTABLE WATERLINE
ST. JOHN THE BAPTIST PARISH, LOUISIANA

KEYMAP

DATE:
JULY, 2018

SHEET NO.
3 OF 11

4/20/2018 Z:\ENG DEPT\17007-Shell WL\FINAL 4.20.18\17007KEY

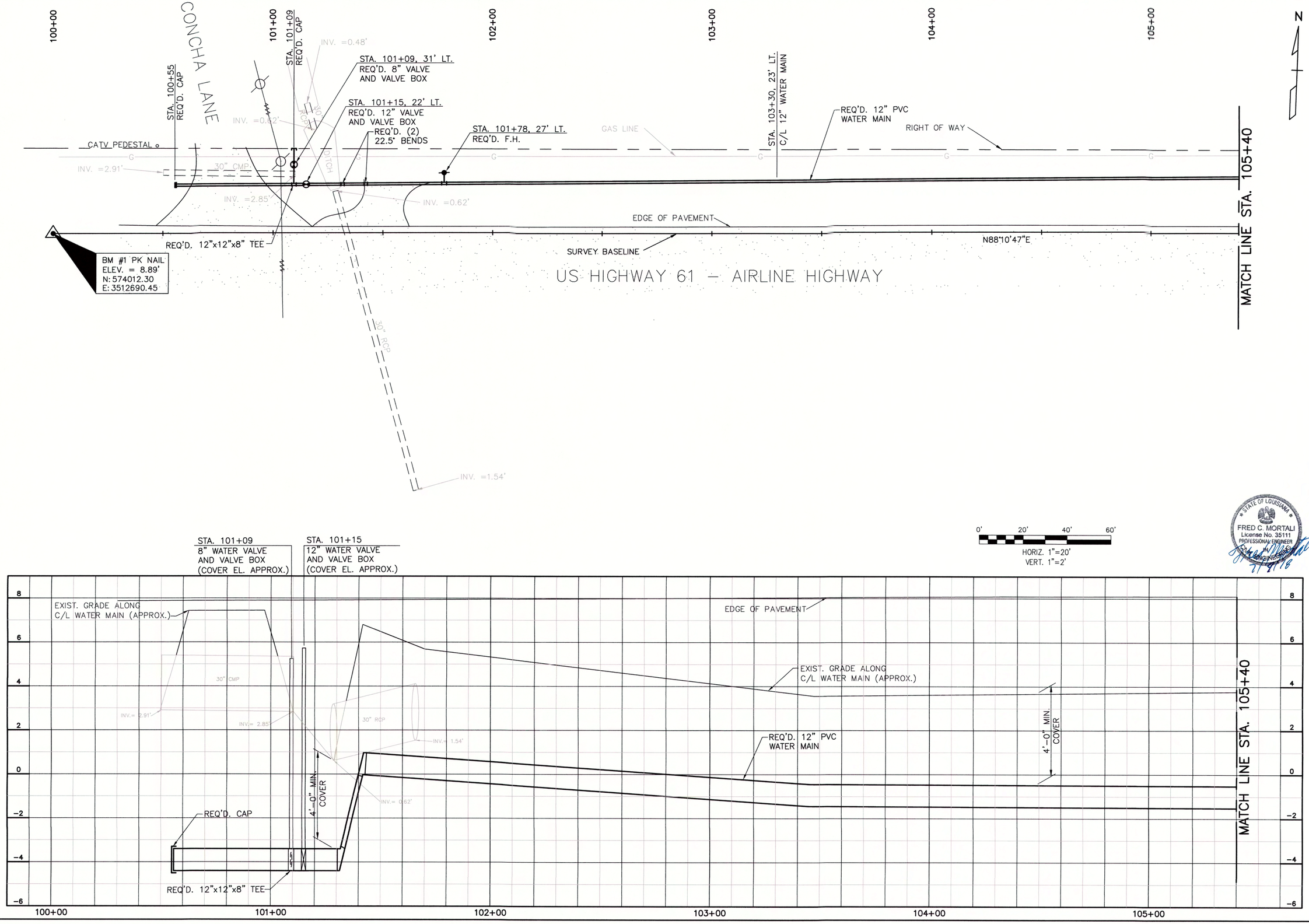

PROJECT NO.
17007

NO.	DATE	REVISION DESCRIPTION

ASSOCIATES, INC.
ENGINEERS • ARCHITECTS • PLANNERS
PROGRAM & PROJECT MANAGERS

THE BAPTIST PARISH ST JOHN LOUISIANA

STATE OF LOUISIANA
FRED C. MORTALI
License No. 35111
PROFESSIONAL ENGINEER
7/9/18

DSGN.	F.M.	DR.	A.H.M.	CKD.	F.M.	APPD.	C.F.N.

SHELL POTABLE WATERLINE
ST. JOHN THE BAPTIST PARISH, LOUISIANA

PLAN–PROFILE
STA. 100+00 – STA. 105+40

DATE:
JULY, 2018

SHEET NO.
4 OF 11

4/20/2018 Z:\ENG DEPT\17007-Shell WL\FINAL 4.20.18\P-P

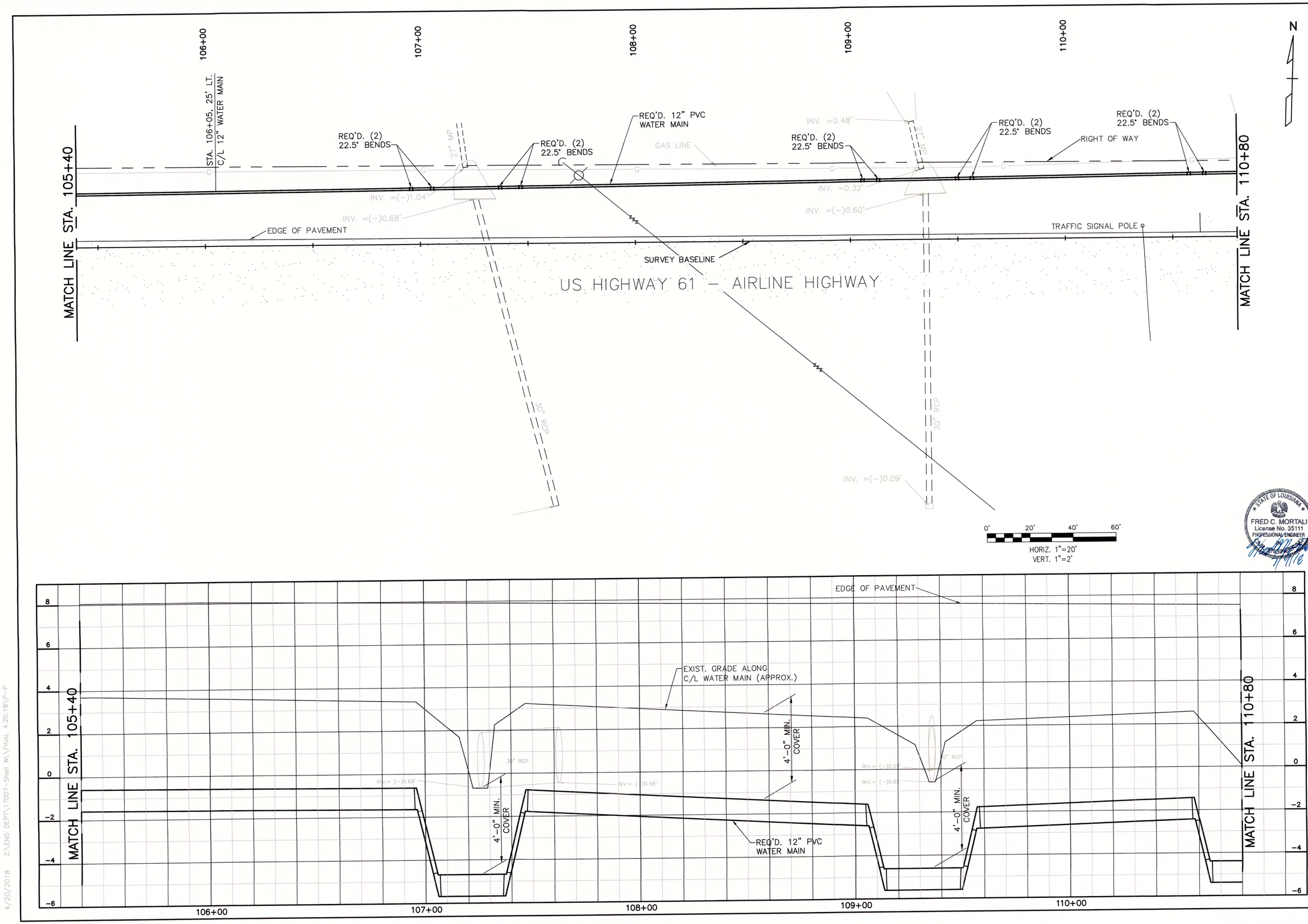

NO.	DATE	REVISION DESCRIPTION

PROJECT NO. 17007

ASSOCIATES, INC.
ENGINEERS • ARCHITECTS • PLANNERS
PROGRAM & PROJECT MANAGERS

ST. JOHN THE BAPTIST PARISH ★ LOUISIANA

STATE OF LOUISIANA
FRED C. MORTALI
License No. 35111
PROFESSIONAL ENGINEER

DSGN.	F.M.
DR.	A.H.M.
CKD.	F.M.
APPD.	C.F.N.

SHELL POTABLE WATERLINE
ST. JOHN THE BAPTIST PARISH, LOUISIANA

PLAN–PROFILE
STA. 105+40 – STA. 110+80

DATE: JULY, 2018

SHEET NO. 5 OF 11

4/20/2018 Z:\ENG DEPT\17007-Shell WL\FINAL 4.20.18\P-P

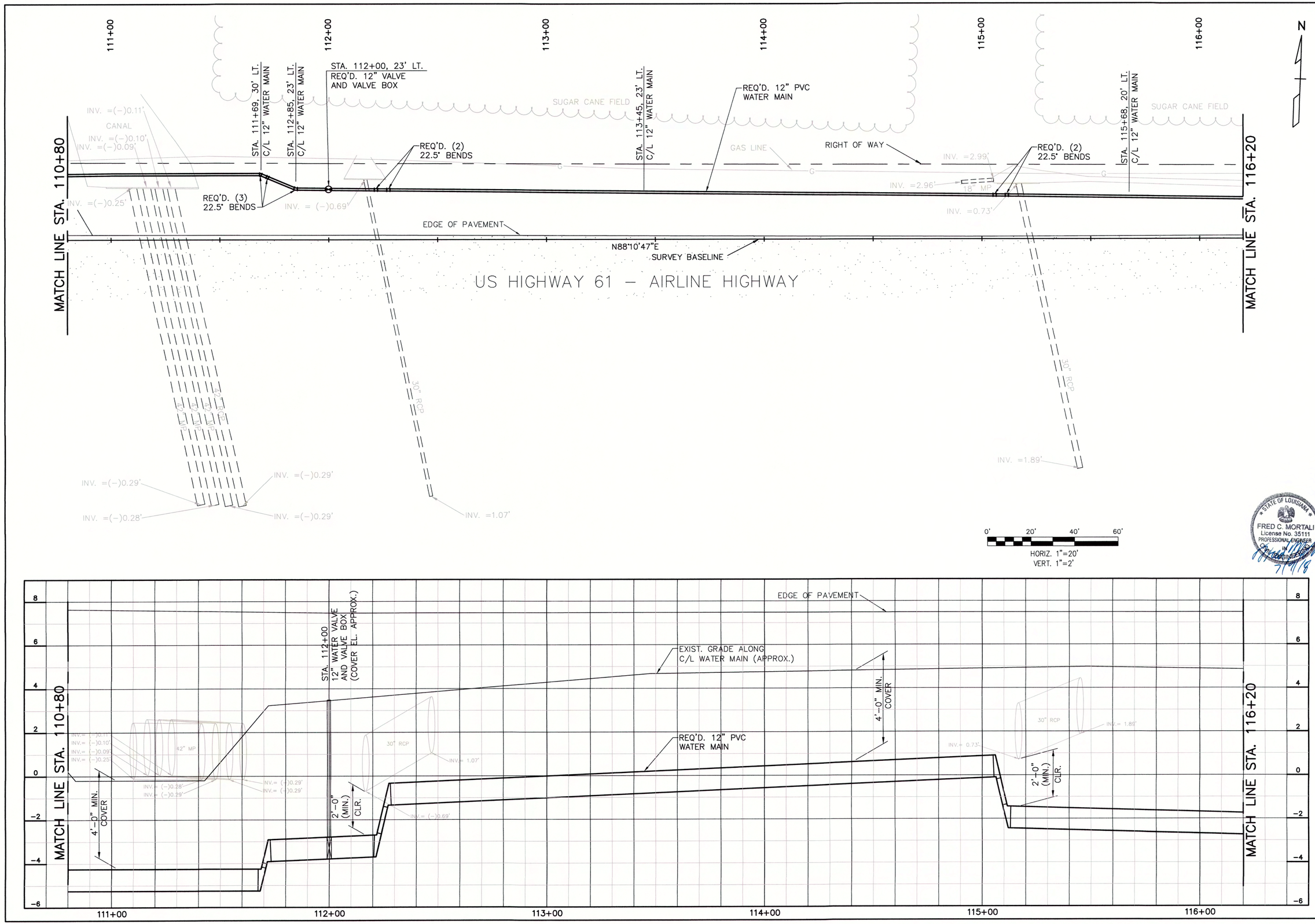

PROJECT NO. 17007

NO.	DATE	REVISION DESCRIPTION

ASSOCIATES, INC.
ENGINEERS • ARCHITECTS • PLANNERS
PROGRAM & PROJECT MANAGERS

ST. JOHN THE BAPTIST PARISH LOUISIANA

STATE OF LOUISIANA
FRED C. MORTALI
License No. 35111
PROFESSIONAL ENGINEER

DSGN.	F.M.
DR.	A.H.M.
CKD.	F.M.
APPD.	C.F.N.

SHELL POTABLE WATERLINE
ST. JOHN THE BAPTIST PARISH, LOUISIANA

PLAN–PROFILE
STA. 110+80 – STA. 116+20

DATE: JULY, 2018

SHEET NO. 6 OF 11

4/20/2018 Z:\ENG DEPT\17007-Shell WL\FINAL 4.20.18\P-P

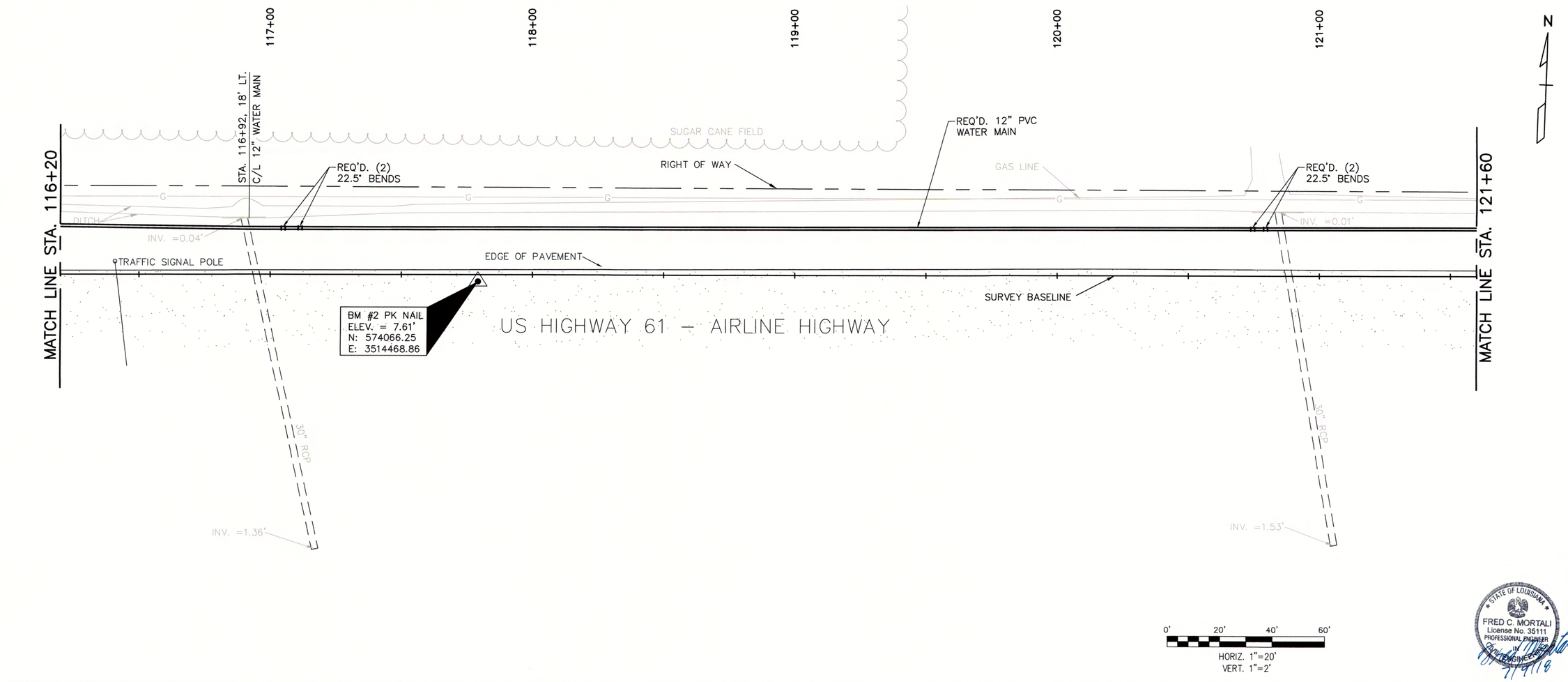

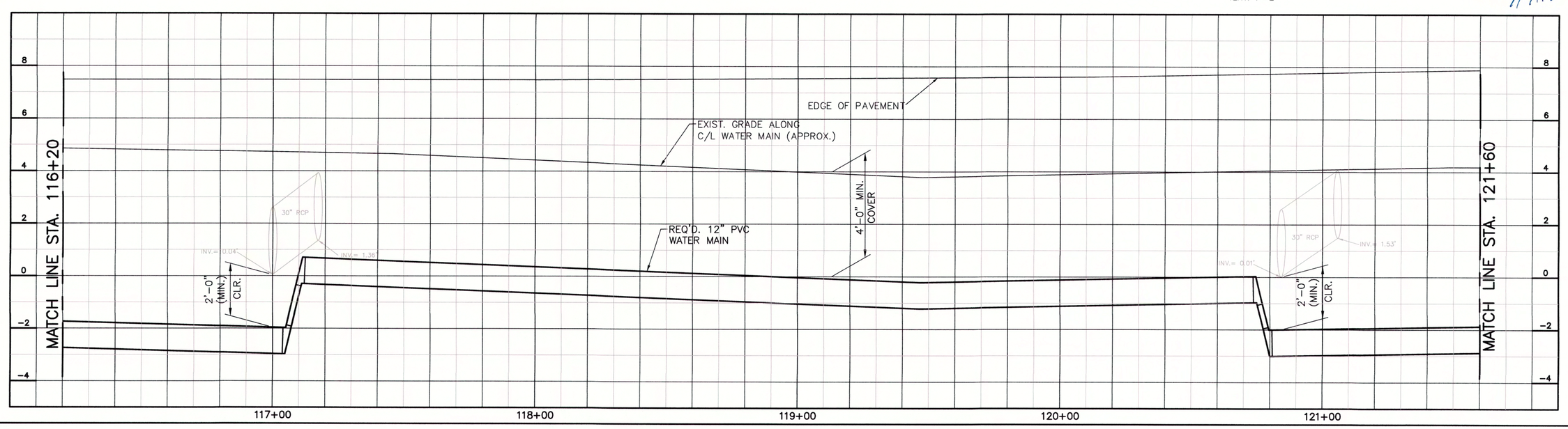

STATE OF LOUISIANA
FRED C. MORTALI
License No. 35111
PROFESSIONAL ENGINEER
IN
CIVIL ENGINEERING
7/9/18

PROJECT NO.
17007

NO.	DATE	REVISION DESCRIPTION

ASSOCIATES, INC.
ENGINEERS • ARCHITECTS • PLANNERS
PROGRAM & PROJECT MANAGERS

ST. JOHN THE BAPTIST PARISH LOUISIANA

DSGN. F.M.	DR. A.H.M.
CKD. F.M.	APPD. C.F.N.

SHELL POTABLE WATERLINE
ST. JOHN THE BAPTIST PARISH, LOUISIANA

PLAN–PROFILE
STA. 116+20 – STA. 121+60

DATE:
JULY, 2018

SHEET NO.
7 OF 11

4/20/2018 Z:\ENG DEPT\17007-Shell WL\FINAL 4.20.18\P-P

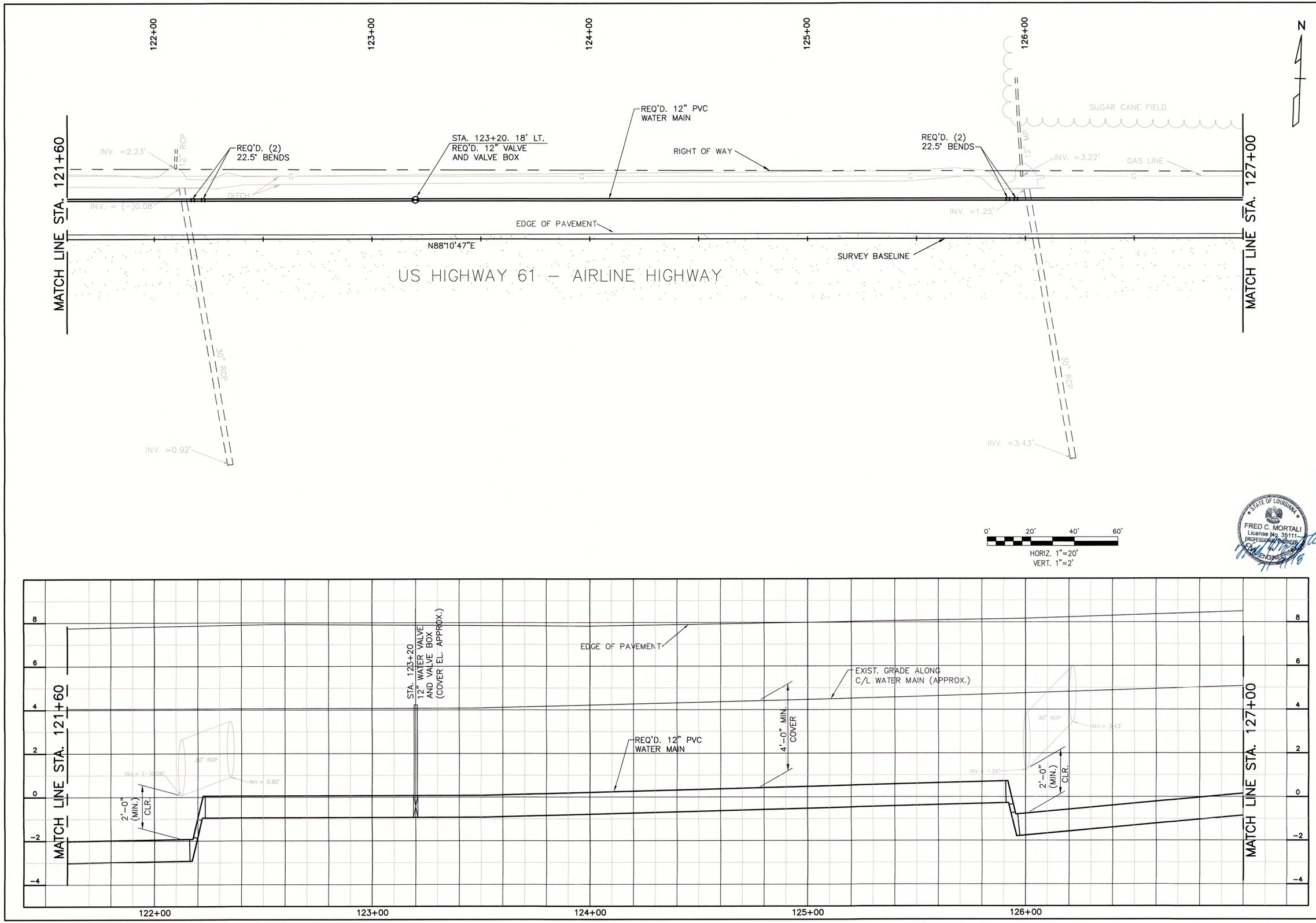

PROJECT NO.
17007

NO.	DATE	REVISION DESCRIPTION

ASSOCIATES, INC.
ENGINEERS • ARCHITECTS • PLANNERS
PROGRAM & PROJECT MANAGERS

ST. JOHN THE BAPTIST PARISH LOUISIANA

DSGN. F.M.	DR. A.H.M.	CKD. F.M.	APPD. C.F.N.

SHELL POTABLE WATERLINE
ST. JOHN THE BAPTIST PARISH, LOUISIANA

PLAN–PROFILE
STA. 121+60 – STA. 127+00

DATE:
JULY, 2018

SHEET NO.
8 OF 11

4/20/2018 Z:\ENG DEPT\17007-Shell WL\FINAL 4.20.18\P-P

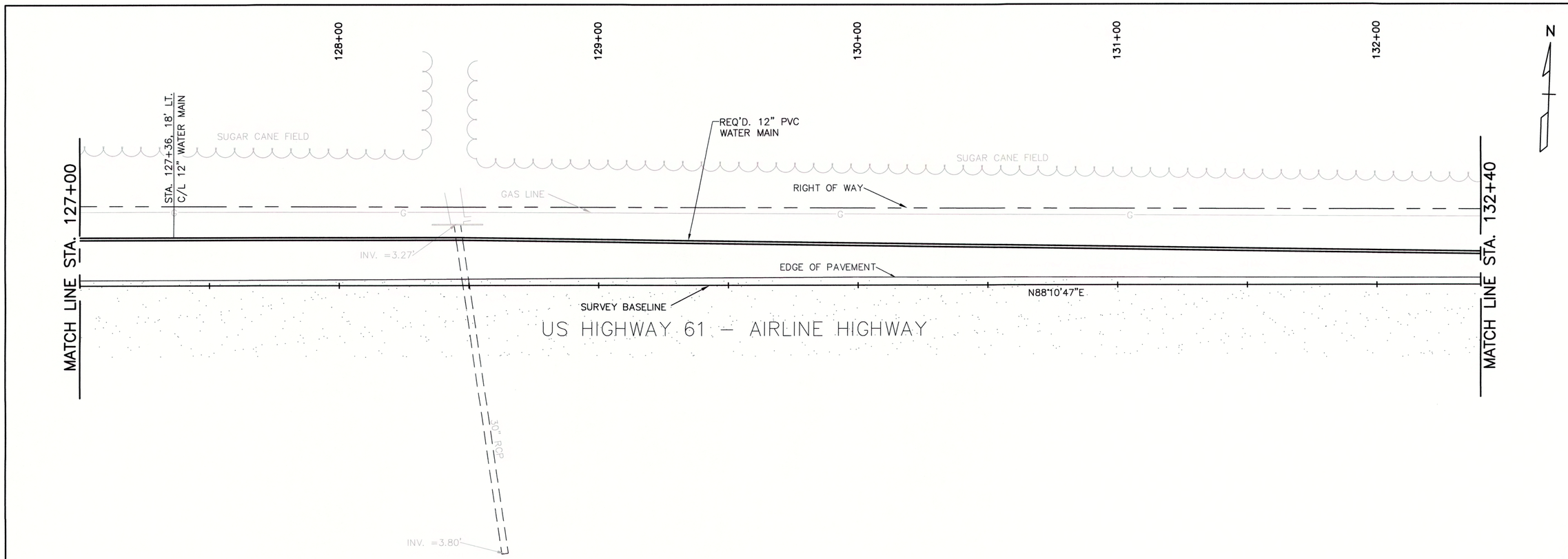

0' 20' 40' 60'

HORIZ. 1"=20'
VERT. 1"=2'

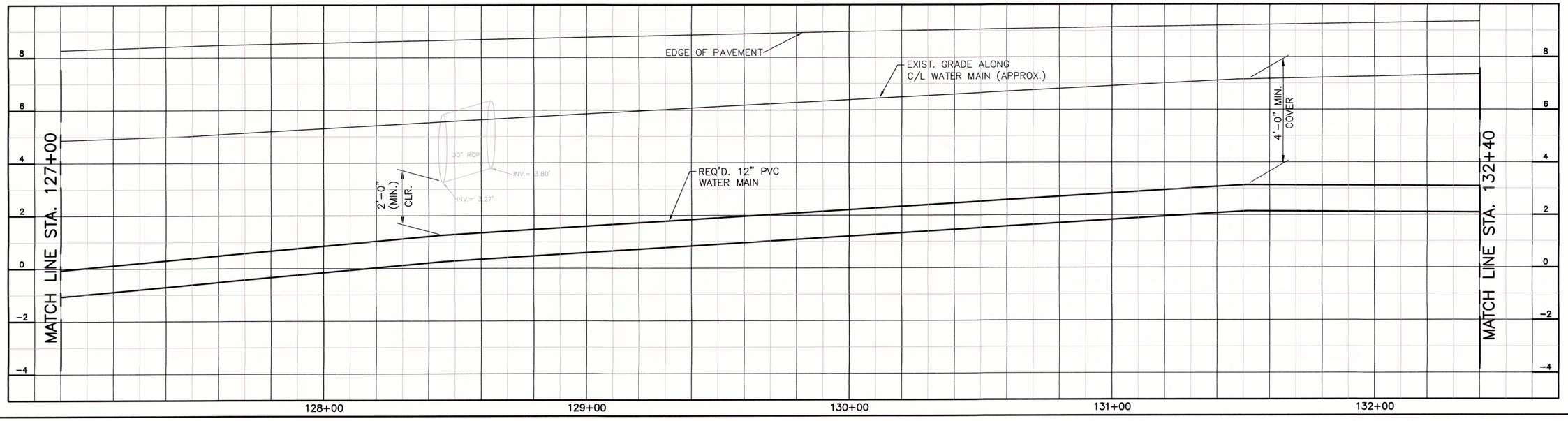

PROJECT NO.
17007

NO.	DATE	REVISION DESCRIPTION

ASSOCIATES, INC.
ENGINEERS • ARCHITECTS • PLANNERS
PROGRAM & PROJECT MANAGERS

ST. JOHN THE BAPTIST PARISH ★ LOUISIANA

STATE OF LOUISIANA
FRED C. MORTALI
License No. 35111
PROFESSIONAL ENGINEER
IN
CIVIL ENGINEERING

DSGN.	F.M.
DR.	A.H.M.
CKD.	F.M.
APPD.	C.F.N.

SHELL POTABLE WATERLINE
ST. JOHN THE BAPTIST PARISH, LOUISIANA

PLAN–PROFILE
STA. 127+00 – STA. 132+40

DATE:
JULY, 2018

SHEET NO.
9 OF 11

4/20/2018 Z:\ENG DEPT\17007-Shell WL\FINAL 4.20.18\P-P

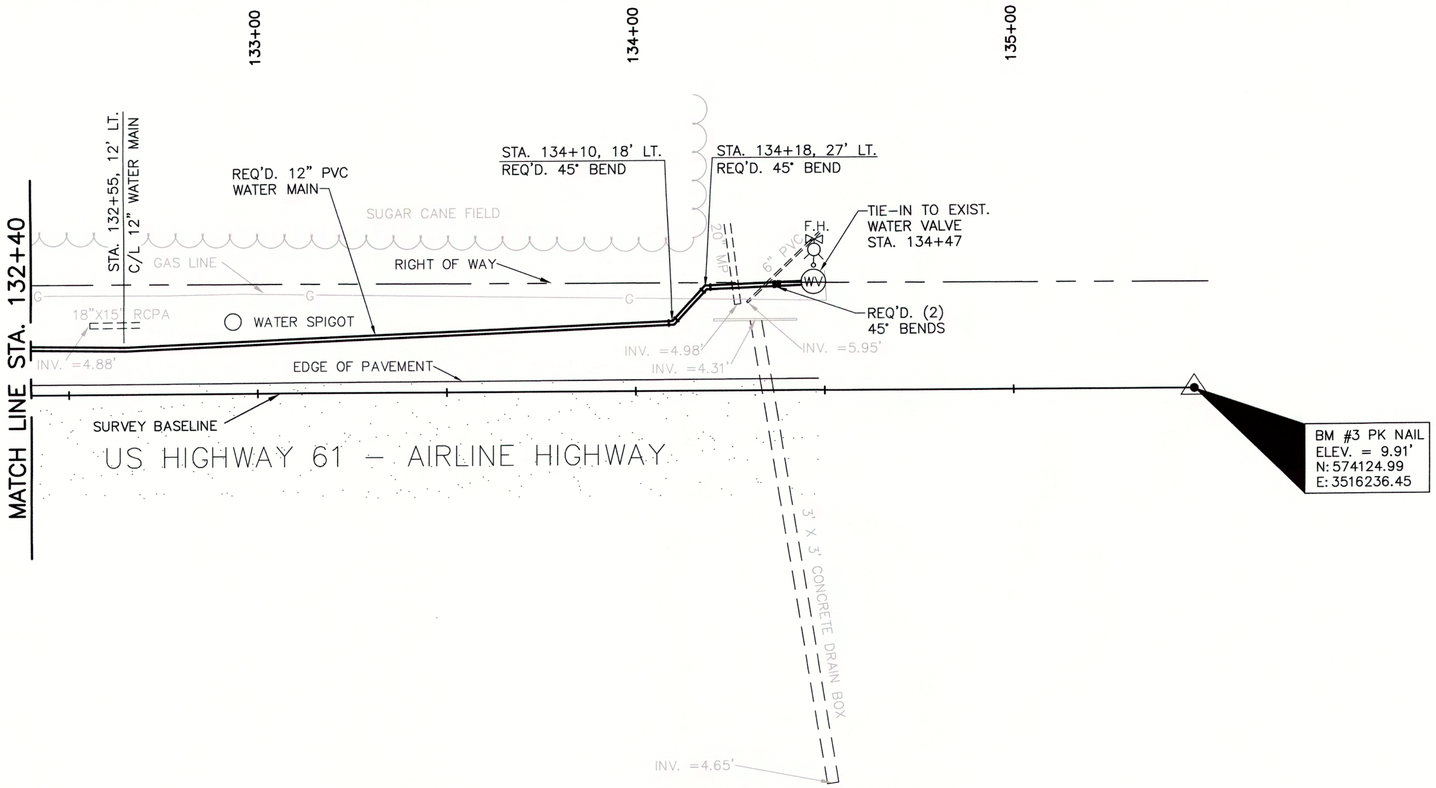

N

0' 20' 40' 60'

HORIZ. 1"=20'
VERT. 1"=2'

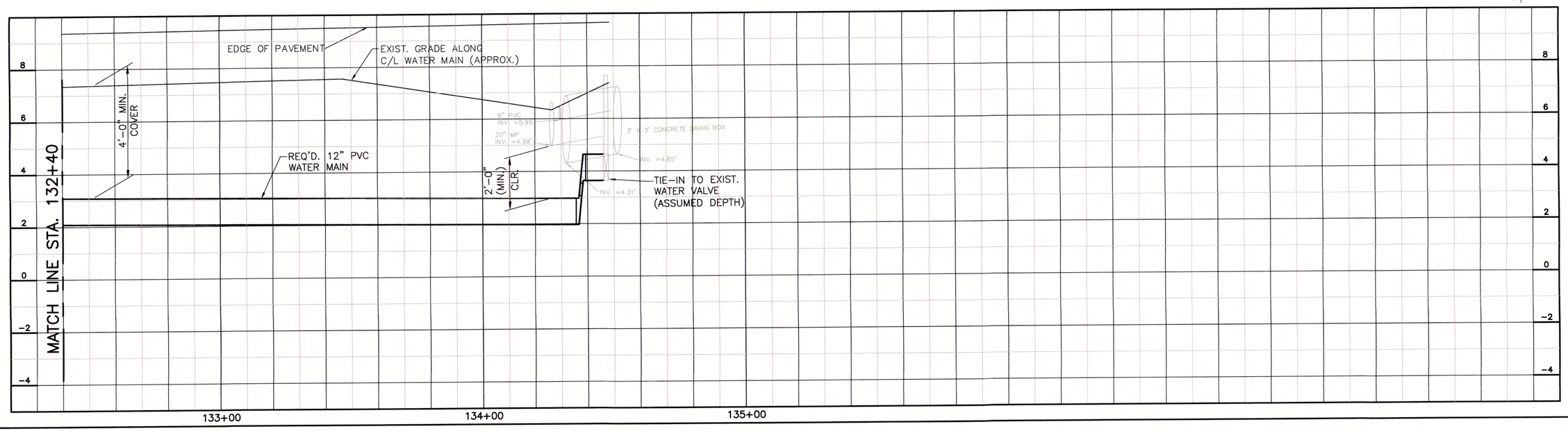

PROJECT NO.
17007

NO.	DATE	REVISION DESCRIPTION

ASSOCIATES, INC.
ENGINEERS • ARCHITECTS • PLANNERS
PROGRAM & PROJECT MANAGERS

ST. JOHN THE BAPTIST PARISH ★ LOUISIANA

STATE OF LOUISIANA
FRED C. MORTALI
License No. 35111
PROFESSIONAL ENGINEER IN CIVIL ENGINEERING
7/9/18

DSGN.	F.M.
DR.	A.H.M.
CKD.	F.M.
APPD.	C.F.N.

SHELL POTABLE WATERLINE
ST. JOHN THE BAPTIST PARISH, LOUISIANA

PLAN–PROFILE
STA. 132+40 – STA. 135+00

DATE:
JULY, 2018

SHEET NO.
10 OF 11

4/20/2018 Z:\ENG DEPT\17007-Shell WL\FINAL 4.20.18\P-P

FIRE HYDRANT COLOR CODE	
SILVER BODY	VISIBILITY
RED TOP	4" MAIN
ORANGE TOP	6" MAIN
GREEN TOP	8" MAIN
LIGHT BLUE TOP	10" & ABOVE
BLUE CAP	VALVE ON HYDRANT

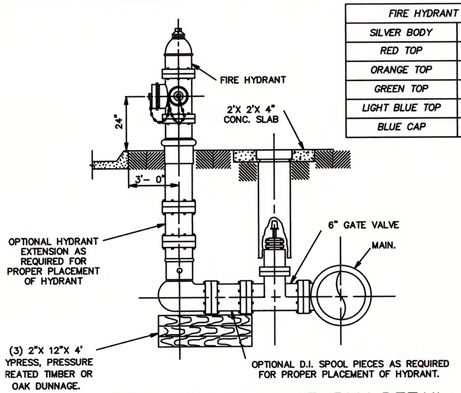

FIRE HYDRANT ASSEMBLY DETAIL

N.T.S.

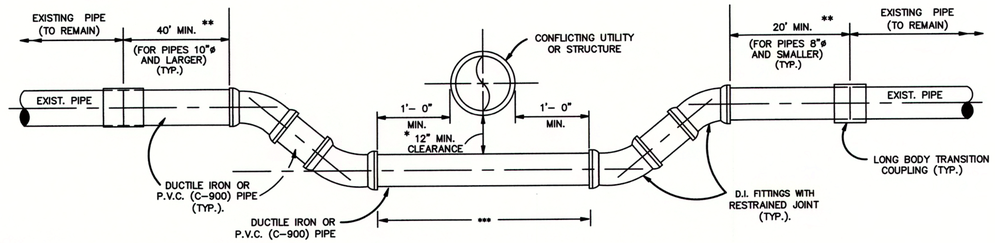

* EXCEPTION. MINIMUM CLEARANCE SHALL BE 18" BETWEEN POTABLE WATER AND SANITARY SEWER LINES.
** REQUIRED MIN. RESTRAINED LENGTH.
*** ANY LENGTH OF DUCTILE IRON PIPE OR P.V.C. PIPE OVER 20' WILL BE PAID FOR UNDER THE UNIT PRICE FOR DUCTILE IRON PIPE OR P.V.C. PIPE. (20' MAX. INCLUDED IN OFFSET PRICE)

TYPICAL VERTICAL (UNDER) OR HORIZONTAL OFFSET DETAILS

FOR WATER AND SEWER FORCE MAINS

N.T.S.

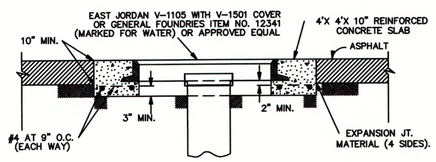

VALVE BOX MANHOLE COVER FOR TRAFFIC AREAS.

N.T.S.

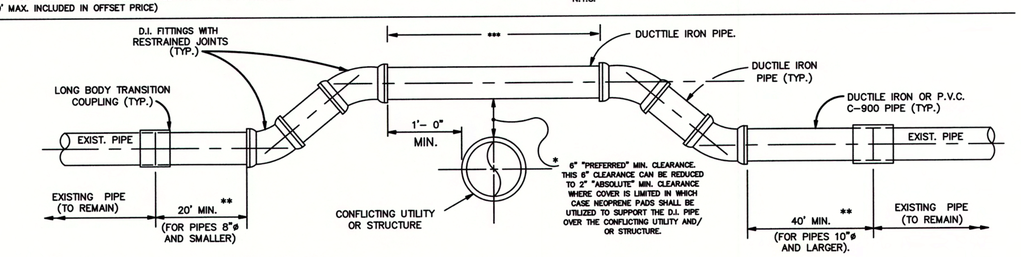

* EXCEPTION. MINIMUM CLEARANCE SHALL BE 18" BETWEEN POTABLE WATER AND SANITARY SEWER LINES.
** REQUIRED MIN. RESTRAINED LENGTH.
*** ANY LENGTH OF DUCTILE IRON PIPE OVER 20' WILL BE PAID FOR UNDER THE UNIT PRICE FOR DUCTILE IRON PIPE (20' MAX. INCLUDED IN OFFSET PRICE.)

TYPICAL VERTICAL (OVER) OFFSET DETAILS

FOR WATER AND SEWER FORCE MAINS.

N.T.S.

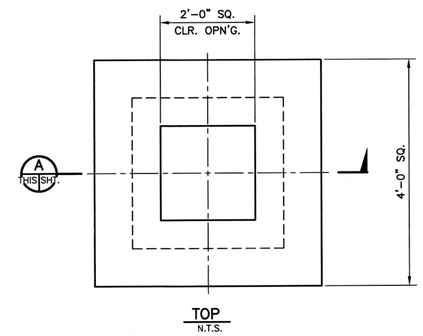

TOP

N.T.S.

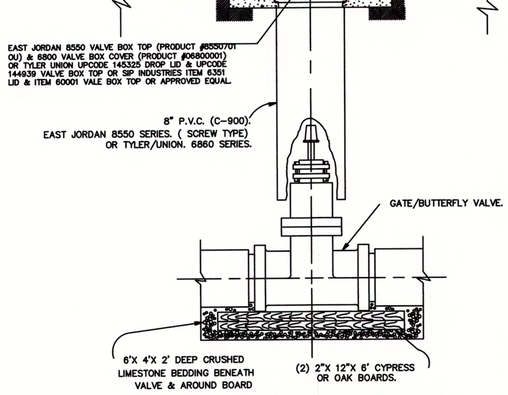

VALVE BOX DETAIL (NON TRAFFIC AREA)

N.T.S.

WATER MAIN STANDARD TRENCH DETAILS

FOR D.I., PVC-C900, PVC-C905 AND HDPE(MIN.THICKNESS, DR.17) PIPES

N.T.S.

MIN. COVER	PIPE SIZE (IN.)
3 FT.	8-10

NOTES:

* COMPACTED SAND, ASTM 2321 CLASS II (SW OR SP) MIN. DENSITY 95% STANDARD PROCTOR (ASTM D698) 6" MAX. LAYERS.
** PROVIDE BELL HOLES AT EACH JOINT.
*** SELECT EXCAVATED MATERIAL FREE OF STUMPS, DEBRIS AND VOIDS.
**** COMPACTED CLASS II BASE COURSE MIN. DESITY 95% STANDARD PROCTOR (ASTM D1557)
***** 18" REQ'D CLASS D GEOTEXTILE FABRIC OVER TOP OF CLASS II BASE (TYP.)

NOTES:

1. WHERE GROUND WATER OR UNSTABLE TRENCH BOTTOM EXISTS, TRENCH BOTTOM SHALL BE STABILIZED (ASTM D2321) TO PROVIDE A WORKING PLATFORM.
2. TRENCH DETAIL SHOWN WILL BE MIN. REQUIREMENTS TO SAFEGUARD THE INTEGRITY OF THE WATER LINE INSTALLATION AT HEREIN-SPECIFIED DEPTHS. THE CONTRACTOR SHALL PROVIDE SUFFICIENT SHEETING AND BRACING TO PROVIDE SAFE WORKING CONDITIONS FOR HIS WORKMEN.

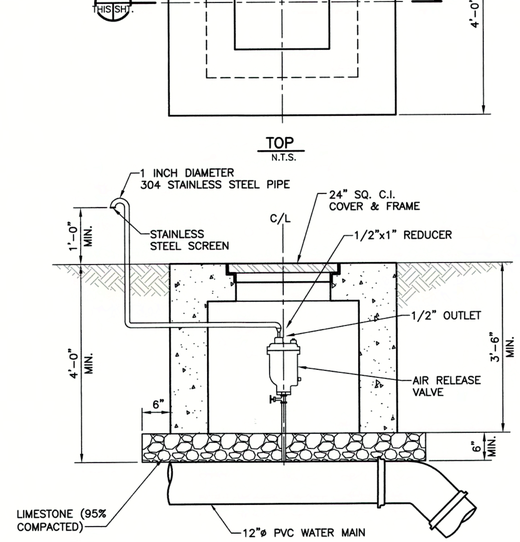

SECTION A THIS SHT.

N.T.S.

AIR RELEASE VALVE MANHOLE

NOTES:

1. PRECAST AIR RELEASE VALVE MANHOLES SHALL BE USED.
2. THE PRICE FOR AIR RELEASE VALVE INSTALLATION SHALL INCLUDE THE VALVE, VALVE BOX MANHOLE, ALL FITTINGS, BACKFILL, LABOR, MATERIALS, EQUIPMENT AND ANCILLARY ITEMS REQUIRED TO INSTALL THIS ITEM IN PLACE AS PER PLANS AND TIE-IN TO THE NEW 12" DIA. WATER MAIN.

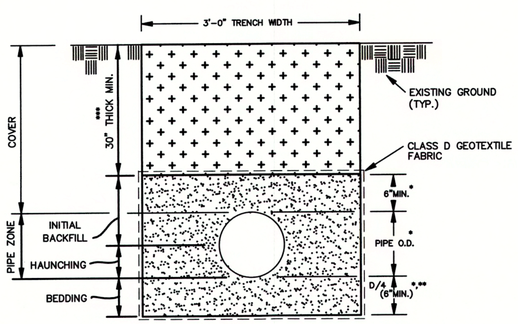

WATER MAIN STANDARD TRENCH DETAIL (RIGHT OF WAY)

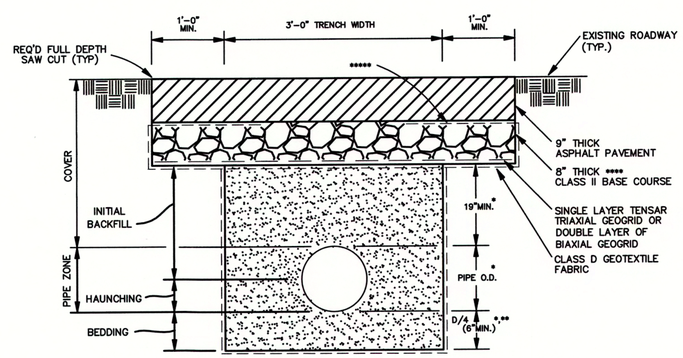

WATER MAIN STANDARD TRENCH DETAIL (ASPHALT)

NOTE:

THESE WATERLINE, WATER VALVE AND FIRE HYDRANT DETAILS ARE FOR BIDDING AND INFORMATIONAL PURPOSES ONLY. THE CONTRACTOR SHALL SUBMIT SHOP DRAWINGS TO THE ENGINEER FOR APPROVAL PRIOR TO CONSTRUCTION.

STATE OF LOUISIANA
FRED C. MORTALI
License No. 35111
PROFESSIONAL ENGINEER
IN
CIVIL ENGINEERING
9/7/18

PROJECT NO. 17007

NO.	DATE	REVISION DESCRIPTION

ASSOCIATES, INC.
ENGINEERS • ARCHITECTS • PLANNERS
PROGRAM & PROJECT MANAGERS

ST. JOHN THE BAPTIST PARISH ★ LOUISIANA

DSGN.	F.M.
DR.	A.H.M.
CKD.	F.M.
APPD.	C.F.N.

SHELL POTABLE WATERLINE
ST. JOHN THE BAPTIST PARISH, LOUISIANA

MISCELLANEOUS DETAILS

DATE: JULY, 2018

SHEET NO. 11 OF 11

7/9/2018 Z:\ENG DEPT\17007-Shell WL\FINAL 7.9.18\17007Misc