ST. JOHN THE BAPTIST PARISH

WOODLAND DRIVE BRIDGE REHABILITATION

LAPLACE, LOUISIANA

INDEX TO SHEETS

SHEET NO.	DESCRIPTION
1	TITLE SHEET AND LAYOUT MAP
2	LEGEND AND GENERAL NOTES
3	EXISTING TOPOGRAPHIC SURVEY
4–5	TYPICAL SECTION
6	PLAN AND PROFILE
7	GRAPHICAL GRADES
8	GEOMETRIC DETAILS
9–10	STRUCTURE REHABILITATION PLAN
11	GUARD RAIL DETAILS
12	ROADWAY DETAILS
13–14	ADDITIONAL PROJECT DETAILS
15	TRAFFIC CONTROL PLAN

LA DOTD STANDARD PLANS

EC–01 (2 SHTS)	TEMPORARY EROSION CONTROL DETAILS
GR–200 (6 SHTS)	HIGHWAY GUARD RAILS (SHEETS 1, 4, 7, 8, 9, 10)

TOTAL SHEETS WITHOUT STANDARD PLANS: 16

TOTAL SHEETS: 24

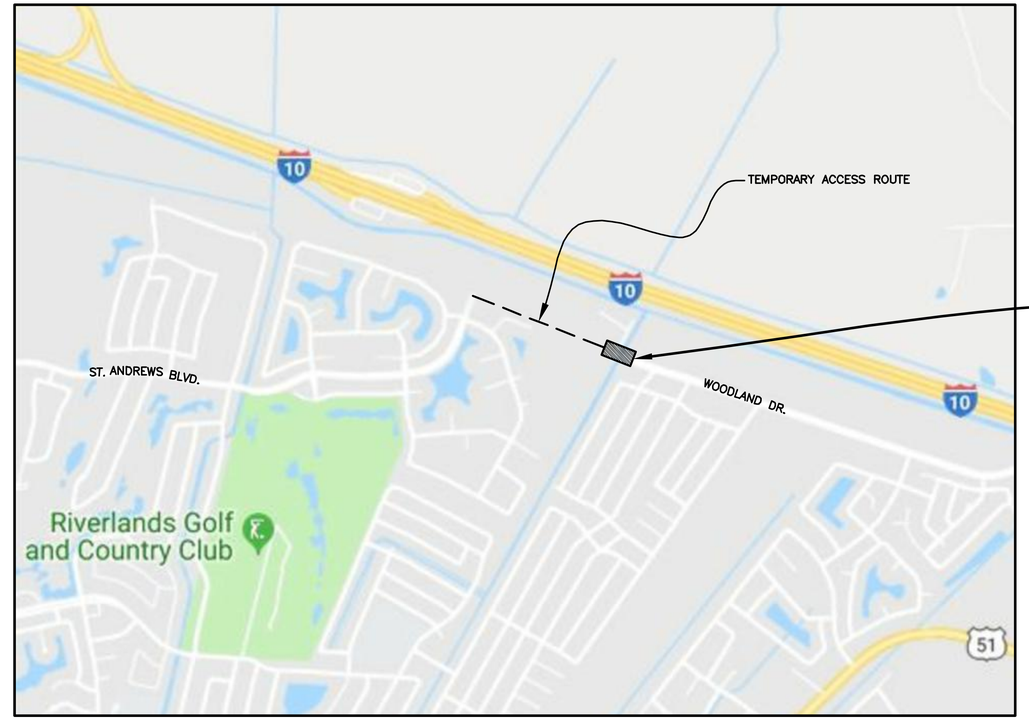

LAYOUT MAP

SCALE: 1 INCH = 1000 FEET

500 0 1000 2000 3000

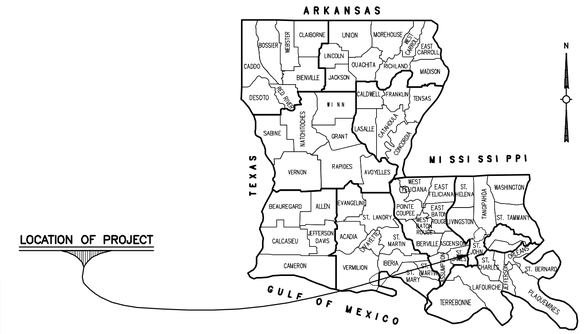

VICINITY MAP

N.T.S.

SCHEDULE OF REVISIONS

DATE	REVISION	DATE	RECOMMENDED	DATE	APPROVED

TYPE OF CONSTRUCTION :

PORTLAND CEMENT CONCRETE PAVING, RETAINING WALLS, TIMBER PILES, EMBANKMENT AND GRADING, GUARDRAIL AND FENCE REPLACEMENT.

NOTE:
THE 2016 LOUISIANA DOTD STANDARD SPECIFICATIONS FOR ROADS AND BRIDGES, AS AMENDED BY THE PROJECT SPECIFICATIONS, SHALL GOVERN ON THIS PROJECT

STATE OF LOUISIANA
ANDRE C. MONNOT
License No. 33626
PROFESSIONAL ENGINEER
IN
CIVIL ENGINEERING

PLANS PREPARED BY AND RECOMMENDED FOR APPROVAL:

ANDRE C. MONNOT, P.E.
VICE PRESIDENT
PRINCIPAL ENGINEERING, INC.
FIRM LIC. NO. 3168

1/19/2018
DATE

PARISH PRESIDENT

NATALIE ROBOTTOM

PARISH COUNCIL

LARRY SORAPURU, JR.	COUNCILMAN AT LARGE, DIVISON A
JACLYN HOTARD	COUNCILWOMAN AT LARGE, DIVISON B
KURT BECNEL	DISTRICT 1
JULIA REMONDET	DISTRICT 2
LENNIX MADERE, JR.	DISTRICT 3
MARVIN PERRILLOUX	DISTRICT 4
MICHAEL WRIGHT	DISTRICT 5
LARRY SNYDER	DISTRICT 6
RAJ PANNU	DISTRICT 7

CADD FILE NAME: 1503-MS-Titlesheet

REVISIONS

DATE:	REMARKS:	APP'D

PRINCIPAL Engineering
PRINCIPAL Engineering, Inc.
1011 N. CAUSEWAY BLVD., SUITE 19
MANDEVILLE, LA 70471
Ph: (985) 624-5001
info@pi-aec.com
www.pi-aec.com

DESIGNED BY: ACM
DRAWN BY: DRC
CHECKED BY: ACM
JOB NO. 1503
SCALE: (24x36)
SCALE: (11x17)
DATE: JAN. 2018

WOODLAND DRIVE BRIDGE REHABILITATION
ST. JOHN THE BAPTIST PARISH
LAPLACE, LOUISIANA

TITLE SHEET AND LAYOUT

SHEET NO. 1

GENERAL NOTES

1. THE CONTRACTOR SHALL MAINTAIN A COPY OF THE LOUISIANA STANDARD SPECIFICATIONS FOR ROADS AND BRIDGES, 2016 EDITION, AT ALL TIMES. ANY REFERENCE TO THE "LSSRB" SHALL MEAN THE SAME DOCUMENT.
2. DESIGN OR PLAN ERRORS SHALL BE REPORTED IMMEDIATELY TO THE ENGINEER FOR CORRECTION. SUCH ERRORS SHALL NOT BE AUTOMATIC GROUNDS FOR CONTRACT MODIFICATION.
3. THE CONTRACTOR SHALL BEAR RESPONSIBILITY FOR SITE RESTORATION AT THE CONCLUSION OF THE WORK, INCLUDING ANY DAMAGED OR DISTRUBED PAVING, SIGNAGE, SIDEWALK, CURBING, VEGETATION, SLOPES, FENCING, LIGHTING, UTILITIES, ETC., NOT REQUIRED TO BE REPLACED OR RECONSTRUCTED. RESTORATION OF SAME SHALL BE TO EXISTING CONDITION OR BETTER, AS DETERMINED BY THE ENGINEER.
4. THE OWNER RESERVES THE RIGHT TO ORDER COFFERDAM REMOVAL IN THE EVENT OF SEVERE RAINFALL OR ANTICIPATED SEVERE RAINFALL TO PREVENT FLOODING. NO ADDITIONAL PAYMENT WILL BE MADE FOR SUCH REMOVAL, IF REQUIRED.
5. BRIDGE CLOSURE SHALL BE COORDINATED WITH ST. JOHN THE BAPTIST PARISH FIRE DEPARTMENT, AT (985) 652-9445.
6. MATERIAL NOT DESIRED TO BE RETAINED BY ST. JOHN THE BAPTIST PARISH SHALL BECOME THE PROPERTY OF THE CONTRACTOR AND SHALL BE DISPOSED OF OFF SITE.
7. ALL EXCAVATION SHALL BE COVERED, BACKFILLED, OR PROTECTED AS DIRECTED BY THE PROJECT ENGINEER, AND SHALL BE FULLY DELINEATED AT NIGHT AND WHEN WORK IS NOT IN PROGRESS. EXCAVATED PITS, ETC. SHALL BE FULLY FENCED OR BARRICADED TO PREVENT ACCESS BY PEDESTRIANS. OPEN CUTS MUST BE STABILIZED TO SUCH CONDITIONS AS TO WITHSTAND VEHICLE AND PEDESTRIAN LOADS, AS APPLICABLE.
8. THE CONTRACTOR SHALL BE RESPONSIBLE FOR LAYING OUT THE WORK AND SHALL VERIFY ALL MEASUREMENTS AND GRADES PRIOR TO BEGINNING OF CONSTRUCTION. PROJECT VERTICAL AND HORIZONTAL CONTROLS HAVE BEEN INDICATED ON THE PLANS. IT SHALL BE THE RESPONSIBILITY OF THE CONTRACTOR TO ESTABLISH BASE LINES AND RELOCATE T.B.Ms SHOWN ON THE PLANS BEFORE DESTROYING THE EXISTING MONUMENTS/NAILS/CROSS CUTS ETC.
9. THE LOCATIONS OF THE EXISTING UTILITIES INDICATED ON THE PLANS WERE FURNISHED BY THE UTILITY COMPANIES AND OTHER AVAILABLE SOURCES AND ARE APPROXIMATE ONLY. IT SHALL BE THE RESPONSIBILITY OF THE CONTRACTOR TO VERIFY THE LOCATION AND DEPTH OF ALL EXISTING UTILITIES BY CONTACTING THE RESPECTIVE UTILITY OWNERS.
10. THE CONTRACTOR SHALL COORDINATE CONSTRUCTION ACTIVITIES WITH THE VARIOUS UTILITY OWNERS PRIOR TO COMMENCEMENT OF WORK.

LEGEND

EXISTING				PROPOSED	
	FENCE		GUARD RAIL WOODEN SUPPORT		FENCE
	POWER LINE		PILE		SWING GATE
	RIGHT-OF-WAY		POWER POLE		TOE OF EMBANKMENT
S	SEWER FORCE MAIN		SEWER MANHOLE		PILE
	TOP OF BANK		SIGN		TYPE III BARRICADE R11-2 MOUNTED
	WATER'S EDGE		TREE LINE		NEW EMBANKMENT
W	WATER MAIN		ASPHALT TO REMAIN		NEW PORTLAND CEMENT CONCRETE PAVEMENT
			CONCRETE TO REMAIN		NEW CRUSHED STONE SURFACE COURSE

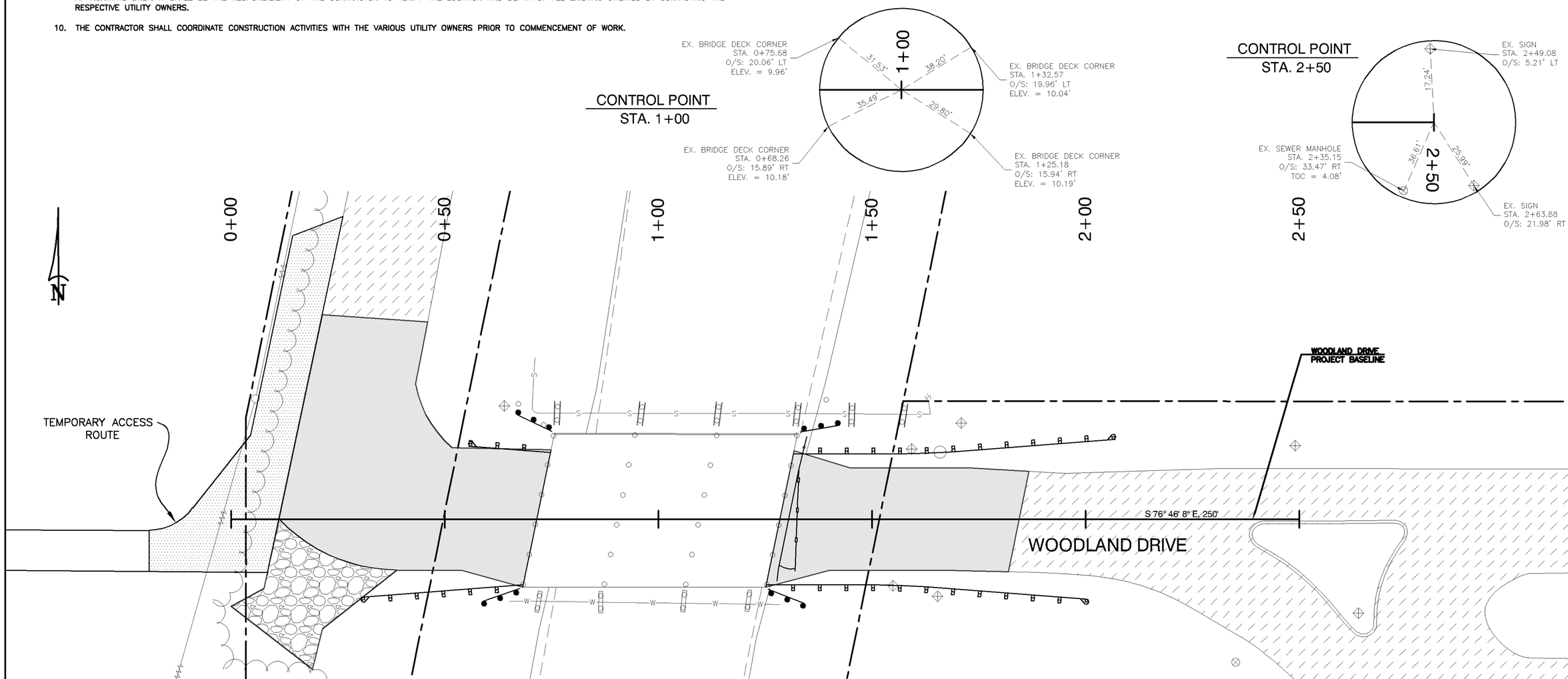

PROJECT LAYOUT

CADD FILE NAME: 1503-MS-General Notes

REVISIONS

DATE:	REMARKS:	APP'D

STATE OF LOUISIANA — ANDRE C. MONNOT, License No. 33626, PROFESSIONAL ENGINEER — CIVIL ENGINEERING — 1/19/2018

PRINCIPAL Engineering
PRINCIPAL Engineering, Inc.
1011 N. CAUSEWAY BLVD., SUITE 19
MANDEVILLE, LA 70471
Ph: (985) 624-5800
info@pi-aec.com
www.pi-aec.com

DESIGNED BY: TN | DRAWN BY: TN | CHECKED BY: ACM | JOB NO. 1503

SCALE: (24x36) 1" = 12' | SCALE: (11x17) 1" = 24' | DATE: JAN. 2018

WOODLAND DRIVE
BRIDGE REHABILITATION
ST. JOHN THE BAPTIST PARISH
LAPLACE, LOUISIANA

LEGEND AND GENERAL NOTES

SHEET NO. 2

SURVEY GRAPHIC TAKEN FROM DRAWING
BY RIVERLANDS SURVEYING CO.,
DATED SEPTEMBER 21, 2015.

LEGEND:
- GAS LINE
- TELEPHONE LINE
- FENCE
- POWER POLE
- POWER LINE
- GUY ANCHOR
- WATER LINE
- DRAIN MANHOLE
- CATCH BASIN
- STREET SIGN
- SEWER MANHOLE
- SEWER LINE
- PK NAIL
- POST
- PK NAIL

LOUISIANA ONE CALL:
TICKET NUMBER: 150230537
AT&T TRANSMISSION
AT&T DISTRIBUTION
COMCAST CABLE
RESERVE TELEPHONE
ST. JOHN THE BAPTIST PARISH
ST. JOHN PARISH COUNCIL

THE LOCATIONS OF UNDERGROUND AND OTHER NONVISIBLE UTILITIES SHOWN HEREON HAVE BEEN DETERMINED FROM DATA EITHER FURNISHED BY THE AGENCIES CONTROLLING SUCH DATA AND/OR EXTRACTED FROM RECORDS MADE AVAILABLE TO US BY THE AGENCIES CONTROLLING SUCH RECORDS. WHERE FOUND, THE SURFACE FEATURES OF LOCATIONS ARE SHOWN. THE ACTUAL NONVISIBLE LOCATIONS MAY VARY FROM THOSE SHOWN HEREON. EACH AGENCY SHOULD BE CONTACTED RELATIVE TO THE PRECISE LOCATION OF ITS UNDERGROUND INSTALLATION PRIOR TO ANY RELIANCE UPON THE ACCURACY OF SUCH LOCATIONS SHOWN HEREON, INCLUDING PRIOR TO EXCAVATION AND DIGGING.
LAONE CALL 1-800-272-3020

SURVEY REFERENCE:
1. PLAN OF LOTS W, X, Y & Z BY J.F. MARSHALL, P.L.S. DATED 1/30/1985.
2. CAMBRIDGE PLACE BY J.F. MARSHALL, P.L.S. DATED 1/10/1978, LAST REVISED 3/4/1980.
3. LAPLACE NORTH SEWERAGE DISTRICT BY J.J. KREBS & SONS, INC. DATED 6/13/1984.

BASIS OF BEARING/ELEVATIONS: BEARINGS/ELEVATIONS HEREON ARE REFERENCED TO GRID NORTH AS ESTABLISHED BY THE LOUISIANA STATE PLANE COORDINATE SYSTEM, LOUISIANA SOUTH ZONE USING LIECA SMARTNET SOLUTION 06/2/2015 NAVD88/NAD 83 GEOID12A

SURVEYOR'S NOTES: A. I CERTIFY THAT THIS PLAT REPRESENTS AN ACTUAL ROUTE SURVEY MADE BY ME, OR BY THOSE UNDER MY DIRECTION AND COMPLIES WITH THE REQUIREMENTS OF LOUISIANA'S "STANDARDS OF PRACTICE FOR BOUNDARY SURVEYS" FOR A CLASS D ROUTE SURVEY SPECIFICALLY CHAPTER 2909 – ROUTE SURVEY
B. NO TITLE OPINION WAS PROVIDED TO THIS FIRM, THEREFORE NO CERTIFICATION IS GIVEN TO THE EXISTENCE OF OTHER SERVITUDES OR EASEMENTS WHICH MAY EXIST OTHER THAN THOSE SHOWN.

CADD FILE NAME:
1503-PL-Existing Topo Survey

REVISIONS		
DATE:	REMARKS:	APP'D

STATE OF LOUISIANA
ANDRE C. MONNOT
License No. 33626
PROFESSIONAL ENGINEER
CIVIL ENGINEERING
1/19/2018

PRINCIPAL Engineering
PRINCIPAL Engineering, Inc.
1011 N. CAUSEWAY BLVD., SUITE 19
MANDEVILLE, LA 70471
Ph: (985) 624-5001
info@pi-aec.com
www.pi-aec.com

DESIGNED BY: -
DRAWN BY: -
CHECKED BY: -
JOB NO. 1503
SCALE: (24x36) 1" = 22'
SCALE: (11x17) 1" = 44'
DATE: JAN. 2018

WOODLAND DRIVE
BRIDGE REHABILITATION
ST. JOHN THE BAPTIST PARISH
LAPLACE, LOUISIANA

EXISTING TOPOGRAPHIC SURVEY

SHEET NO.
3

LEGEND

1. PORTLAND CEMENT CONCRETE APPROACH SLAB (12" THICK) (CLASS A)
2. PORTLAND CEMENT CONCRETE PAVEMENT (8" THICK) (TYPE B)
3. GRANULAR MATERIAL (12" THICK)
4. 8" BARRIER TYPE CONCRETE CURB
5. SEED/FERTILIZE ALL DISTURBED AREAS
6. EMBANKMENT/COMPACTED SUBGRADE
7. GUARD RAIL
8. CRUSHED STONE SURFACE COURSE (6" THICK)
9. GEOTEXTILE FABRIC
   (TO BE PAID UNDER PAY ITEM: CRUSHED STONE SURFACE COURSE (6" THICK))

NOTE:

SEE SHEET 14 FOR CONCRETE APPROACH SLAB REINFORCEMENT.

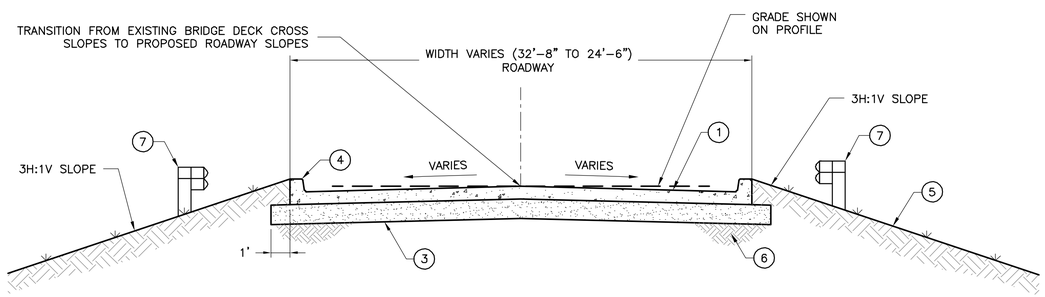

TYPICAL CONCRETE APPROACH SLAB WITH BARRIER CURB

STA. 0+56.54 TO STA. 0+71.54

STA. 1+28.46 TO STA. 1+42.46

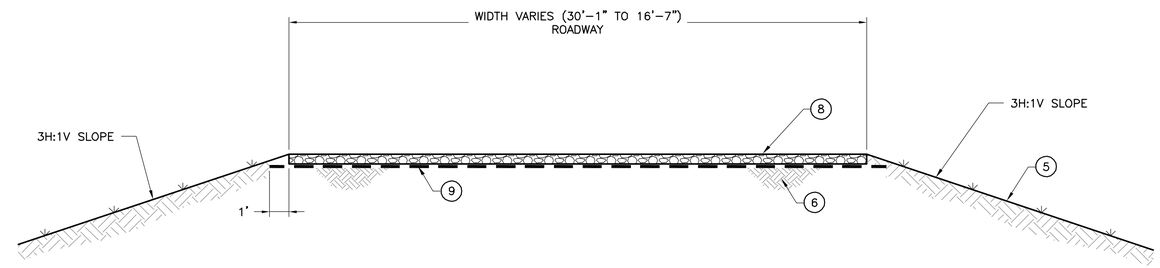

TYPICAL CRUSHED STONE SURFACE COURSE ROADWAY

STA. 0+00 TO STA. 0+38.75

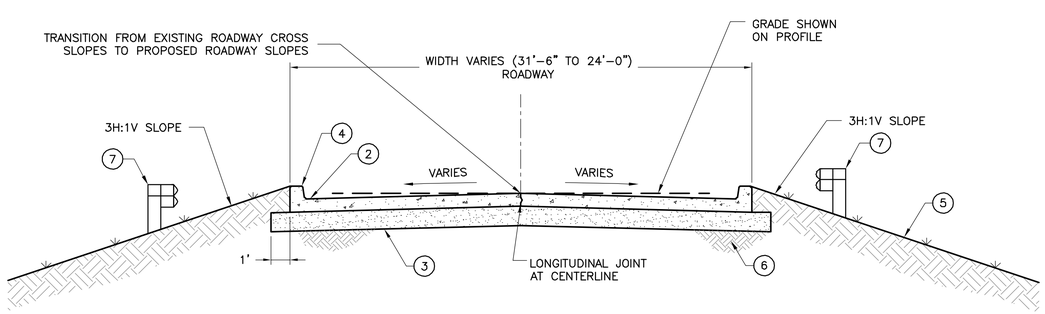

TYPICAL CONCRETE ROADWAY WITH BARRIER CURB

STA. 0+43.49 TO STA. 0+56.54

STA. 1+42.46 TO STA. 1+84.46

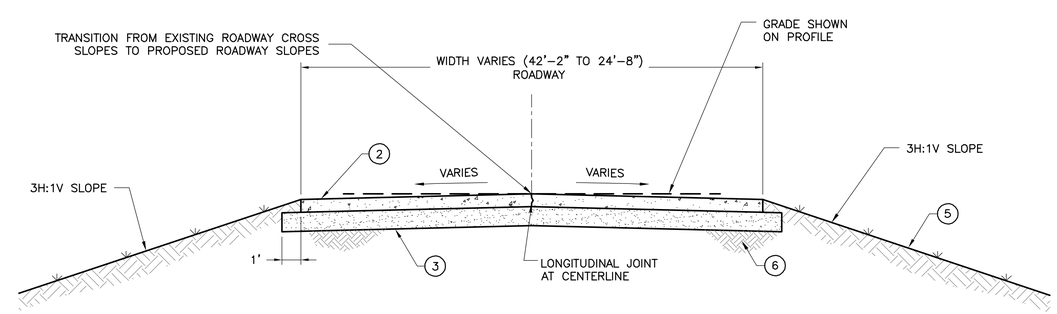

TYPICAL CONCRETE ROADWAY

STA. 0+11.19 TO STA. 0+43.49

CADD FILE NAME: 1503-SC-Typical Section

REVISIONS		
DATE:	REMARKS:	APP'D

STATE OF LOUISIANA — ANDRE C. MONNOT, License No. 33626, PROFESSIONAL ENGINEER, CIVIL ENGINEERING — 1/19/2018

PRINCIPAL Engineering
PRINCIPAL Engineering, Inc.
1011 N. CAUSEWAY BLVD., SUITE 19
MANDEVILLE, LA 70471
Ph: (985) 624-5001
info@pi-aec.com
www.pi-aec.com

DESIGNED BY: TN	DRAWN BY: TN	CHECKED BY: ACM	JOB NO. 1503
SCALE: (24x36) N.T.S.	SCALE: (11x17) N.T.S.		DATE: JAN. 2018

WOODLAND DRIVE
BRIDGE REHABILITATION
ST. JOHN THE BAPTIST PARISH
LAPLACE, LOUISIANA

TYPICAL SECTIONS

SHEET NO. 4

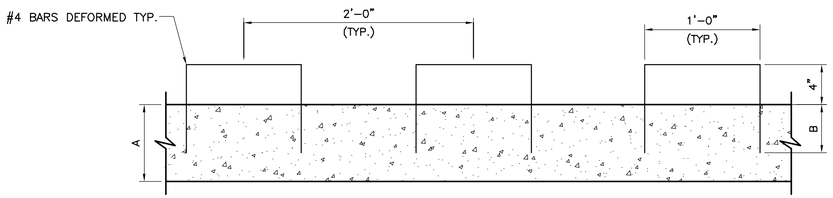

CONCRETE CURB STEEL BAR DETAIL

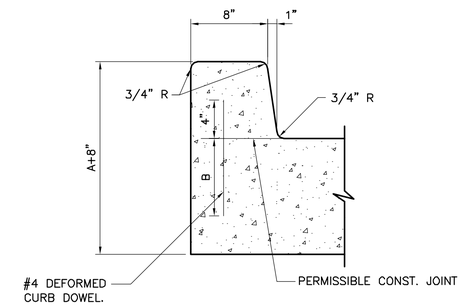

8" BARRIER TYPE CONCRETE CURB

N.T.S.

		DIMENSION (IN)
CONCRETE APPROACH SLAB	A	12
	B	8
CONCRETE ROADWAY	A	8
	B	4

NOTE:

CURB STEEL MAY BE OMITTED IF CURB IS POURED MONOLITHICALLY WITH ROADWAY.

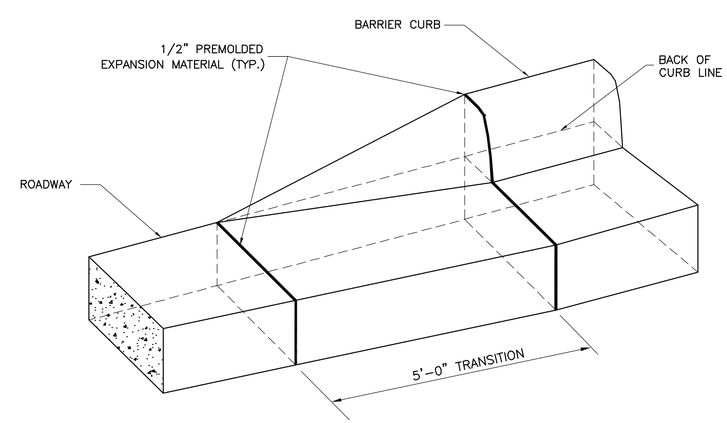

NO CURB - BARRIER
CURB TRANSITION

N.T.S.

CADD FILE NAME:
1503-SC-Typical Section

REVISIONS

DATE:	REMARKS:	APP'D

STATE OF LOUISIANA
ANDRE C. MONNOT
License No. 33628
PROFESSIONAL ENGINEER
CIVIL ENGINEERING
1/19/2018

PRINCIPAL Engineering
PRINCIPAL Engineering, Inc.
1011 N. CAUSEWAY BLVD., SUITE 19
MANDEVILLE, LA 70471
Ph: (985) 624-5001
info@pi-aec.com
www.pi-aec.com

DESIGNED BY: TN
DRAWN BY: TN
CHECKED BY: ACM
JOB NO. 1503

SCALE: (24x36) N.T.S.
SCALE: (11x17) N.T.S.
DATE: JAN. 2018

WOODLAND DRIVE
BRIDGE REHABILITATION
ST. JOHN THE BAPTIST PARISH
LAPLACE, LOUISIANA

TYPICAL SECTIONS

SHEET NO.
5

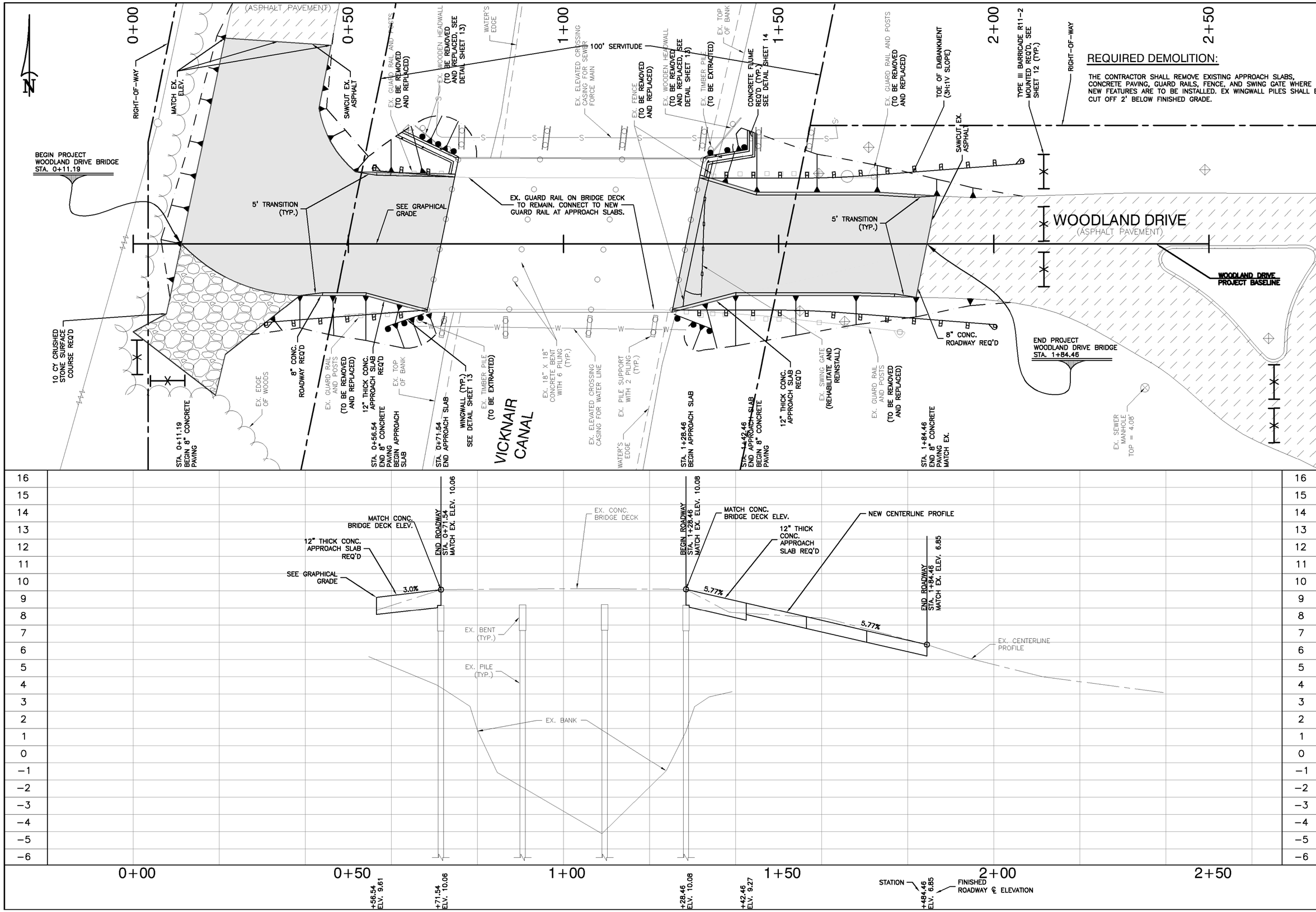

REQUIRED DEMOLITION:

THE CONTRACTOR SHALL REMOVE EXISTING APPROACH SLABS, CONCRETE PAVING, GUARD RAILS, FENCE, AND SWING GATE WHERE NEW FEATURES ARE TO BE INSTALLED. EX WINGWALL PILES SHALL BE CUT OFF 2' BELOW FINISHED GRADE.

CADD FILE NAME: 1503-PL-Plan & Profile

REVISIONS

DATE:	REMARKS:	APP'D

STATE OF LOUISIANA — ANDRE C. MONNOT, License No. 33626, PROFESSIONAL ENGINEER — CIVIL ENGINEERING — 1/19/2018

PRINCIPAL Engineering

PRINCIPAL Engineering, Inc.
1011 N. Causeway Blvd., Suite 19
Mandeville, LA 70471
Ph: (985) 624-5800
mail@pi-acc.com
www.pi-acc.com

DESIGNED BY: TN	DRAWN BY: TN	CHECKED BY: ACM	JOB NO. 1503
SCALE: (24x36) 1" = 10' 1" = 2'	SCALE: (11x17) 1" = 20' 1" = 4'	DATE: JAN. 2018	

WOODLAND DRIVE
BRIDGE REHABILITATION
ST. JOHN THE BAPTIST PARISH
LAPLACE, LOUISIANA

PLAN AND PROFILE

SHEET NO. 6

6 OF 15

LEGEND

BJ	BUTT JOINT
CJ	CONSTRUCTION JOINT
EJ	EXPANSION JOINT
LJ	LONGITUDINAL JOINT

CADD FILE NAME: 1503-PL-Graphical Grade

REVISIONS		
DATE:	REMARKS:	APP'D

STATE OF LOUISIANA
ANDRE C. MONNOT
License No. 33626
PROFESSIONAL ENGINEER
CIVIL ENGINEERING
1/19/2018

PRINCIPAL Engineering
PRINCIPAL Engineering, Inc.
1011 N. CAUSEWAY BLVD., SUITE 19
METAIRIE, LA 70001
Ph: (985) 624-5800
mail@pl-acc.com
www.pl-acc.com

DESIGNED BY: TN	DRAWN BY: TN	CHECKED BY: ACM	JOB NO. 1503
SCALE: (24x36) 1" = 10'	SCALE: (11x17) 1" = 20'	DATE: JAN. 2018	

WOODLAND DRIVE
BRIDGE REHABILITATION
ST. JOHN THE BAPTIST PARISH
LAPLACE, LOUISIANA

GRAPHICAL GRADE

SHEET NO. 7

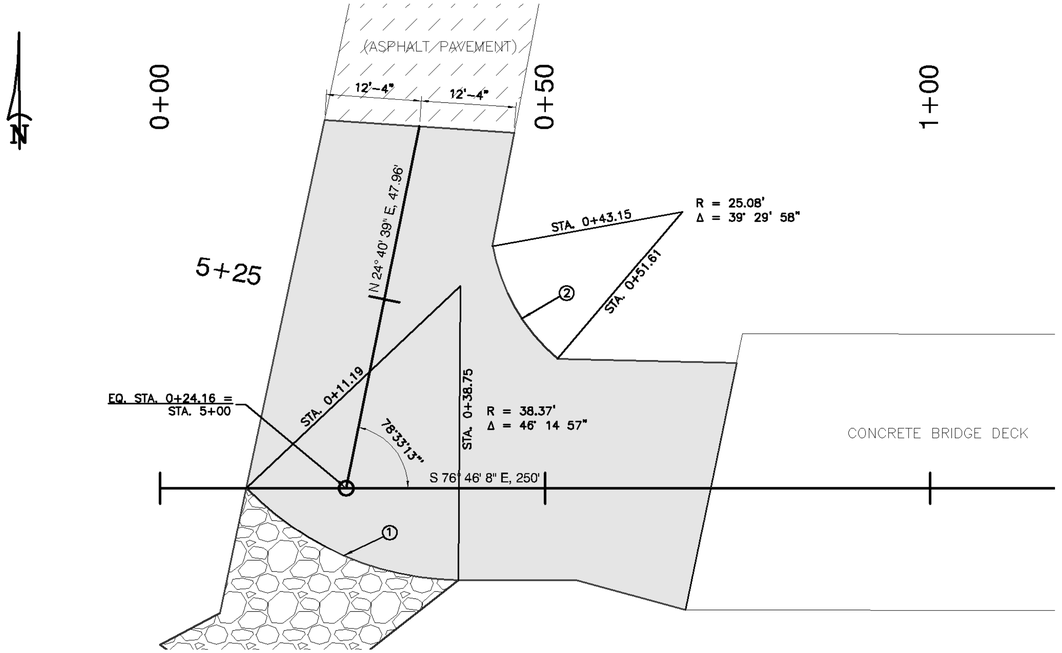

TURNOUT AT STA. 0+24.16

HORIZONTAL CURVE DATA							
CURVE NO.	RADIUS	START		END		CENTER	
		STA.	OFFSET	STA.	OFFSET	STA.	OFFSET
1	38.37	0+11.19	0	0+38.75	12.00' RT	0+39.02	26.27' LT
2	25.08	0+43.15	31.44' LT	0+51.61	16.75' LT	0+46.10	23.36' LT

POINT	STA.	OFFSET
A	0+11.19	–
B	0+18.82	6.22' RT
C	0+28.46	10.51' RT
D	0+38.75	12.0' RT
E	0+46.41	12.0' RT
F	0+47.10	9.21' RT
G	0+54.06	12.0' RT
H	0+7.73	16.25' RT
I	0+00	20.41' RT
J	0+19.11	35.15' RT
K	0+21.40	25.69' RT
L	0+35.81	1.86' RT
M	5+5.75	12.63' LT
N	5+12.92	3.53' LT

POINT	STA.	OFFSET
O	5+21.26	12.47' LT
P	5+21.64	9.63' LT
Q	5+31.33	12.37' LT
R	5+46.33	12.25' LT
S	5+47.96	–
T	5+49.59	12.23' RT
U	5+32.96	–
V	5+28.59	1.55' RT
W	5+34.59	12.37' RT
X	5+28.30	15.99' RT
Y	5+15.12	11.44' RT
Z	0+51.61	16.75' LT
AA	0+59.96	16.57' LT
BB	0+29.68	4.20' LT

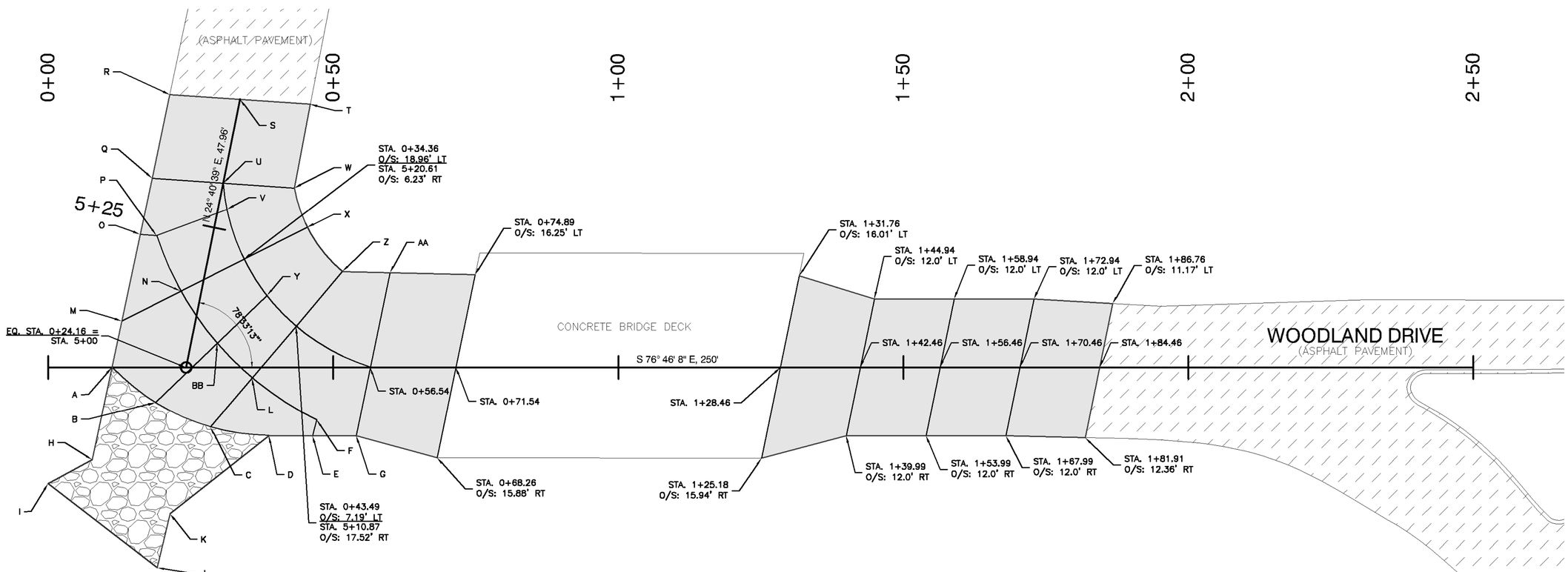

CADD FILE NAME:
1503-DT-Geometric Details

REVISIONS

DATE:	REMARKS:	APP'D

STATE OF LOUISIANA
ANDRE C. MONNOT
License No. 33626
PROFESSIONAL ENGINEER
CIVIL ENGINEERING
1/17/2018

PRINCIPAL Engineering
PRINCIPAL Engineering, Inc.
1011 N. Causeway Blvd., Suite 19
Mandeville, LA 70471
Ph: (985) 624-5800
info@pe-acc.com
www.pe-acc.com

DESIGNED BY: TN
DRAWN BY: TN
CHECKED BY: ACM
JOB NO. 1503
SCALE: (24x36) 1" = 10'
SCALE: (11x17) 1" = 20'
DATE: JAN. 2018

WOODLAND DRIVE
BRIDGE REHABILITATION
ST. JOHN THE BAPTIST PARISH
LAPLACE, LOUISIANA

GEOMETRIC DETAILS

SHEET NO.
8

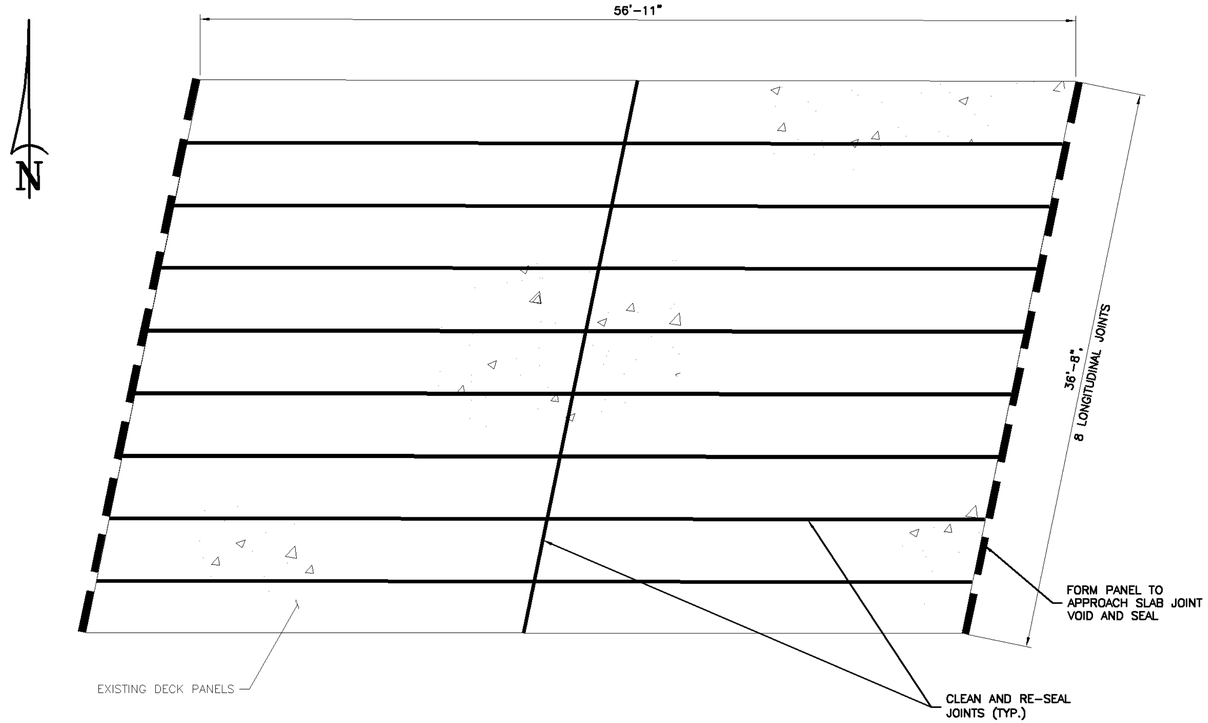

CONCRETE BRIDGE DECK JOINT SEAL PLAN

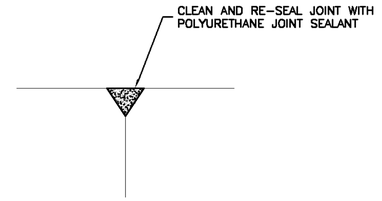

PANEL JOINT DETAIL

SCALE : N.T.S.

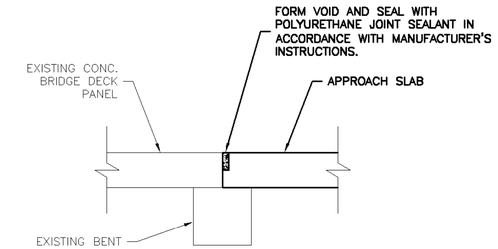

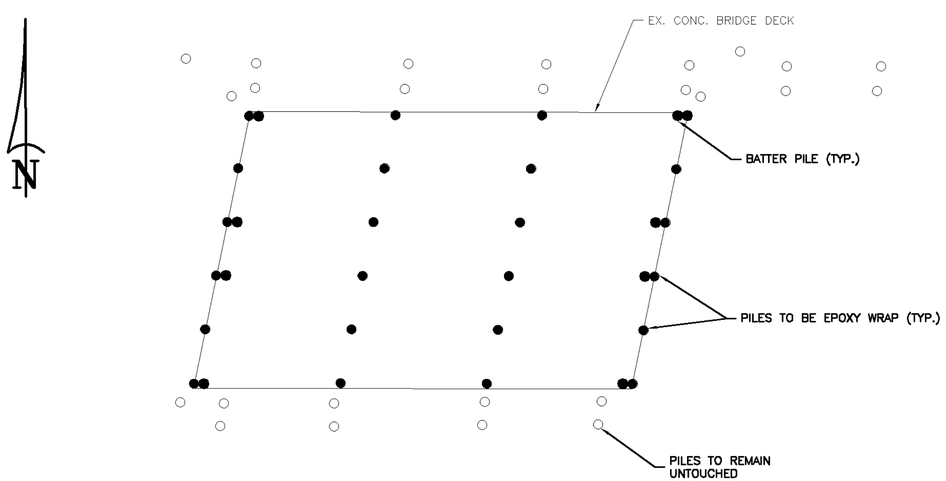

PILE REHABILITATION PLAN
(BID ALT. NO. 1)

SCALE : N.T.S.

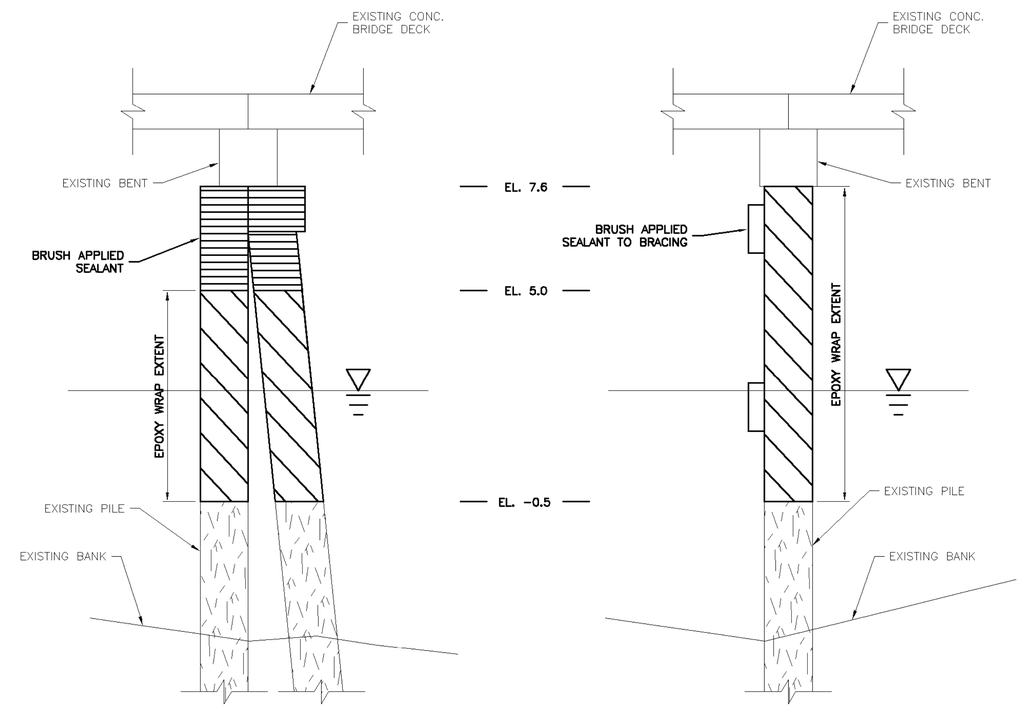

PILE REHABILITATION DIAGRAMS
(BID ALT. NO. 1)

SCALE : N.T.S.

PILE REHABILITATION NOTES:

1. EPOXY WRAP SYSTEM SHALL BE AQUAWRAP BY POWER WRAP. APPROVED PILE JACKET ALTERANTIVE IS FX-70 BY SIMPSON STRONG-TIE COMPANY.
2. THE CONTRACTOR SHALL UNBOLT, REMOVE, STORE, AND PROTECT CROSS BRACING PRIOR TO PILING REHABILITATION. GALVANIZED WIRE ROPE AT BATTER PILINGS MAY REMAIN.
3. PRESSURE WASH AND AGGRESSIVELY SAND WOOD SURFACES TO REMOVE CONTAMINANTS.
4. APPLY TWO-PART EPOXY FILLER TO VOIDS ON PILING (BRACING BOLT HOLES EXCLUDED); FOLLOWED BY EPOXY PRIMER. COMPLETE PILING REHAB WITH APPLICATION OF WATER-CURED RESIN-IMPREGNATED BI-AXIAL GLASS FABRIC WRAP IN ACCORDANCE WITH MANUFACTURER'S INSTRUCTIONS. FILLER, PRIMER, WRAP, AND ACCESSORIES SHALL BE FROM THE SAME MANUFACTURER.
5. NEATLY DRILL WRAP, EPOXY GROUT, AND RE-INSTALL BRACING THROUGH EXISTING BOLT HOLES.
6. HARDWARE SHALL BE NEW 3/4" DIA ASTM A36 THREADED FASTENERS, WASHERS, AND NUTS; HOT DIPPED GALVANIZED.
7. BRUSH APPLIED SEALANT SHALL BE TNEMEC SERIES 66/161 HB EPOXOLINE 2.0-3.0 DRY MILS (THINNED TO MAXIMUM RECOMMENDED AMOUNT) AS PRIMER, FOLLOWED BY TNEMEC SERIES 265 ELASTO-SHIELD TG AT 50-60 MILS., APPLIED IN ACCORDANCE WITH MANUFACTURER'S INSTRUCTIONS. OVERCOAT WITH SERIES 66/161 FOR COLOR.

CADD FILE NAME: 1503-PL-Structural Rehab Plan

DATE:	REMARKS:	REVISIONS	APP'D

STATE OF LOUISIANA — ANDRE C. MONNOT — License No. 33626 — PROFESSIONAL ENGINEER — CIVIL ENGINEERING — 1/19/2018

PRINCIPAL Engineering
PRINCIPAL Engineering, Inc.
1011 N. CAUSEWAY BLVD., SUITE 19
METAIRIE, LA 70471
Ph: (985) 624-5800
mail@pl-acc.com
www.pl-acc.com

DESIGNED BY: TN
DRAWN BY: TN
CHECKED BY: ACM
JOB NO. 1503
SCALE: (24x36) 1" = 5'
SCALE: (11x17) 1" = 10'
DATE: JAN. 2018

WOODLAND DRIVE
BRIDGE REHABILITATION
ST. JOHN THE BAPTIST PARISH
LAPLACE, LOUISIANA

STRUCTURAL REHABILITATION PLAN

SHEET NO. 9

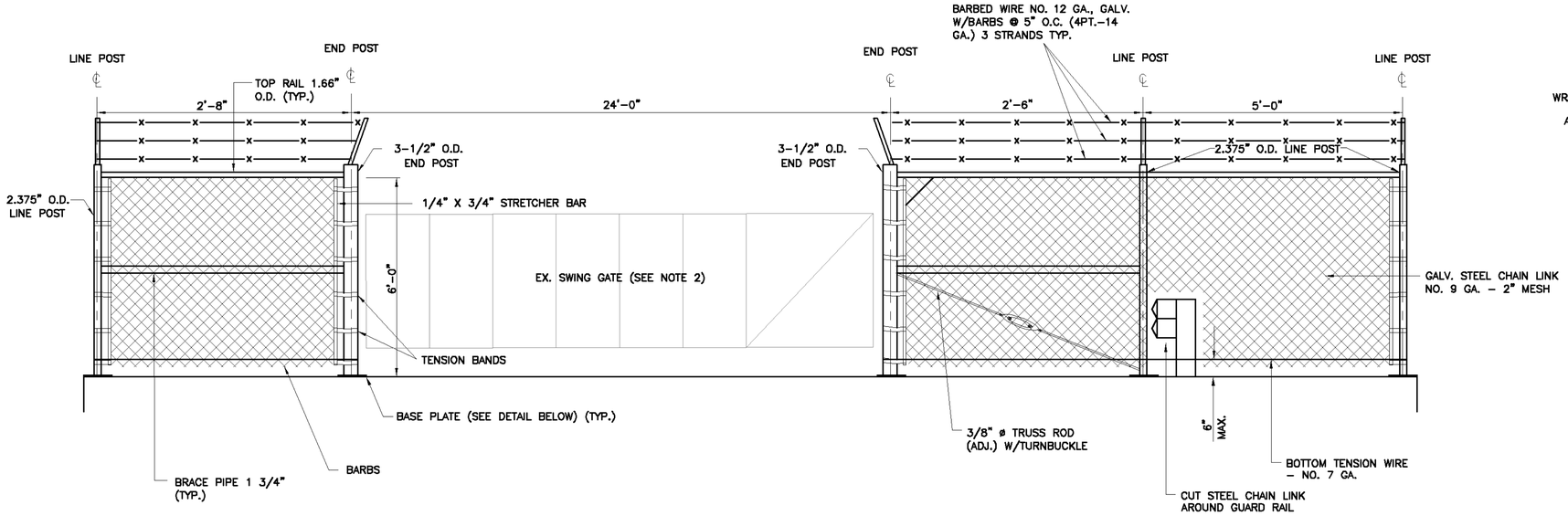

CHAIN LINK FENCE ELEVATION

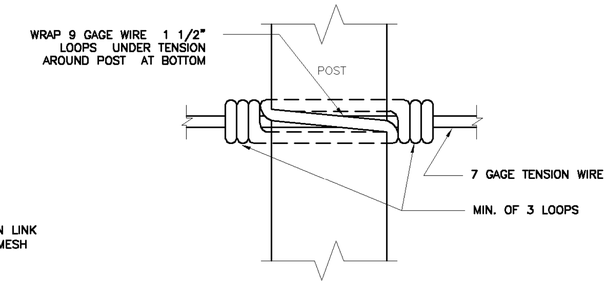

TENSION WIRE ATTACHMENT DETAIL

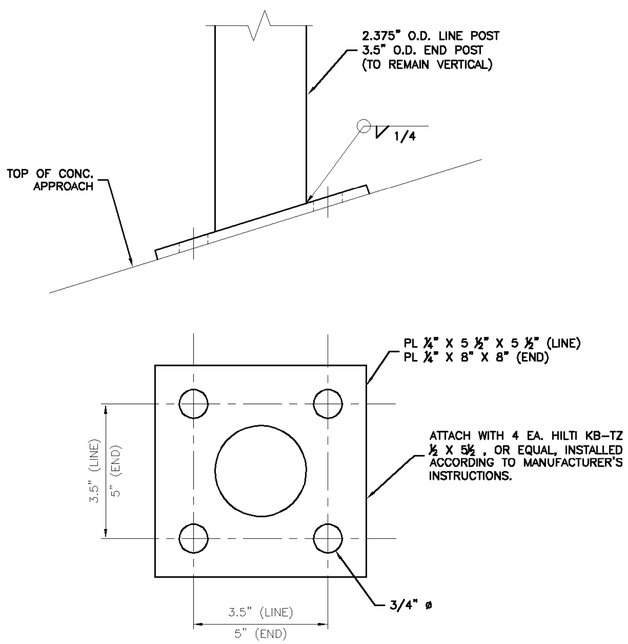

FENCE POST MOUNT TO CONCRETE APPROACH

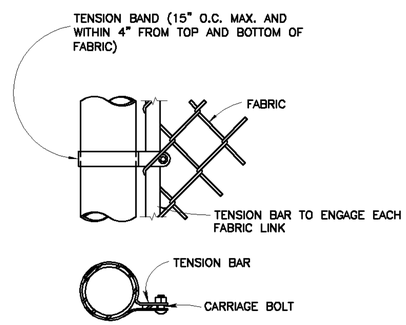

END OR LINE POST DETAIL

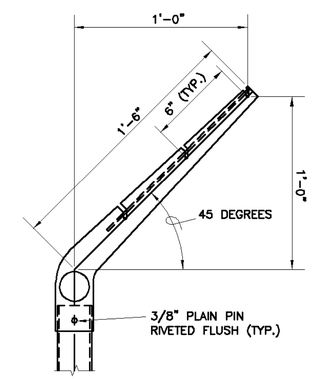

LINE POST

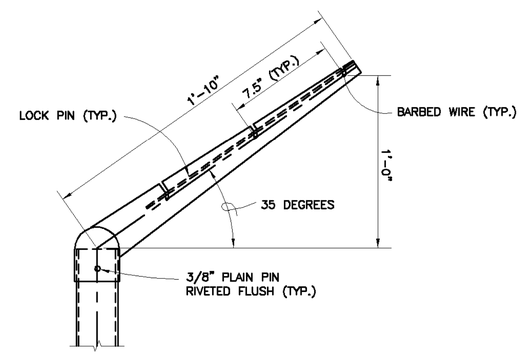

END POST

EXTENSION ARM DETAILS

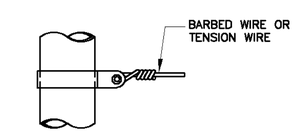

TENSION BAND DETAIL

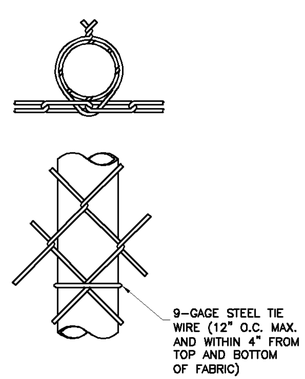

LINE POST ATTACHMENTS

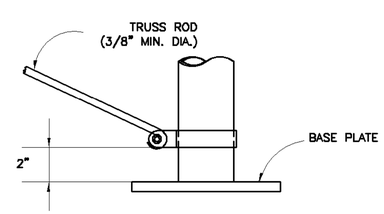

TRUSS ROD AND BAND

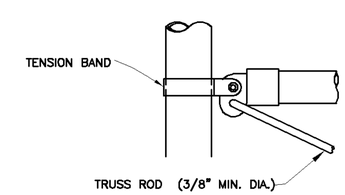

ROUND POST

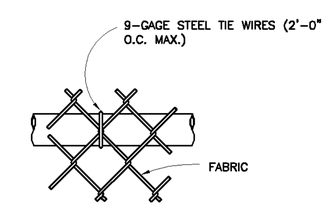

TOP OR BRACE RAIL ATTACHMENT

NOTES:

1. ASSEMBLY SHALL BE SHOP FABRICATED AND HOT-DIPPED GALVANIZED.

NOTES:

1. ALL FENCE MATERIALS AND HARDWARE TO BE HOT-DIP GALV.
2. SWING GATE SHALL BE SHOP BLASTED, PAINTED, AND RE-INSTALLED. TNEMEC SERIES 66/161 2.0-3.0 DRY MILS FOLLOWED BY TNEMEC SERIES 1074 ENDURA-SHIELD 2.0-3.0 DRY MILS, COLOR SELECTED BY OWNER.

CADD FILE NAME: 1503-PL-Structural Rehab Plan

DATE:	REMARKS:	REVISIONS	APP'D

STATE OF LOUISIANA — ANDRE C. MONNOT, License No. 33626, PROFESSIONAL ENGINEER — CIVIL ENGINEERING — 1/19/2018

PRINCIPAL Engineering
PRINCIPAL Engineering, Inc.
1011 N. CAUSEWAY BLVD., SUITE 19
METAIRIE, LA 70471
PH: (985) 624-5800
mail@pl-acc.com
www.pl-acc.com

DESIGNED BY: TN
DRAWN BY: TN
CHECKED BY: ACM
JOB NO. 1503
SCALE: (24x36) N.T.S.
SCALE: (11x17) N.T.S.
DATE: JAN. 2018

WOODLAND DRIVE BRIDGE REHABILITATION
ST. JOHN THE BAPTIST PARISH
LAPLACE, LOUISIANA

STRUCTURAL REHABILITATION PLAN

SHEET NO. 10

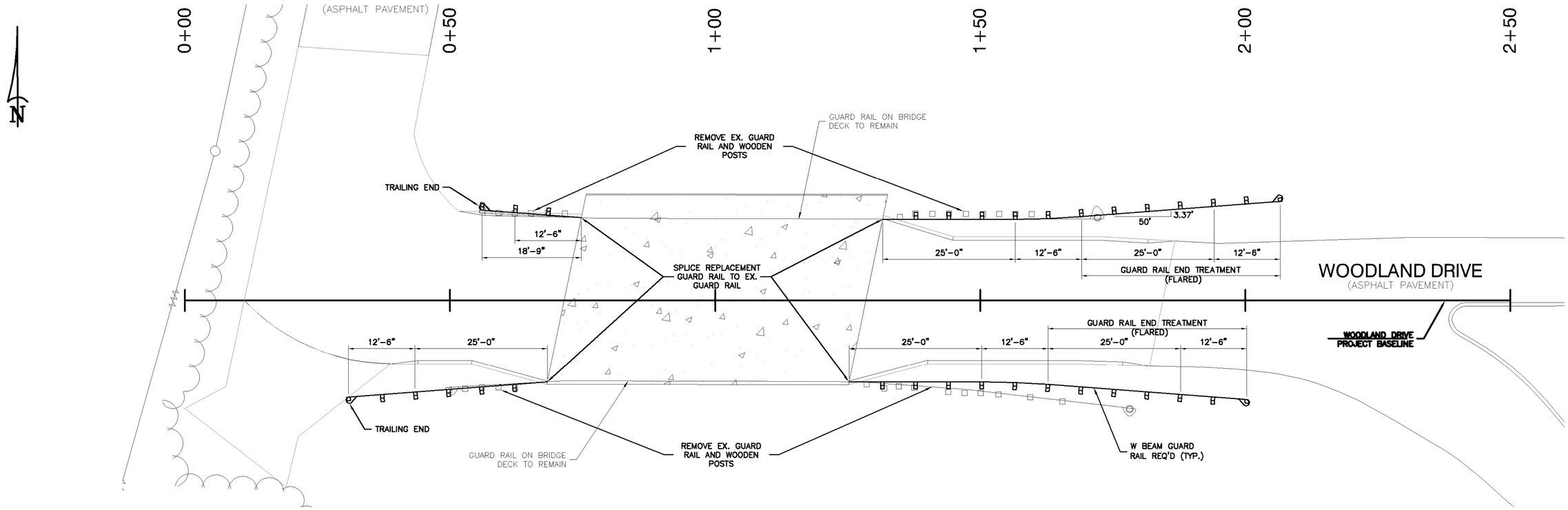

NOTES:

1. REFER TO LADOTD STANDARD DRAWING, GR-200, FOR GUARD RAIL DETAILS.
2. POST SPACING = 6'-3" (TYP.)
3. END TREATMENT TYPE SHALL BE SELECTED FROM CURRENT LADOTD APPROVED MATERIALS LIST. TEST LEVEL 2.

CADD FILE NAME: 1503-DT-Guard Rail Details

REVISIONS			
DATE:	REMARKS:		APP'D

STATE OF LOUISIANA
ANDRE C. MONNOT
License No. 33626
PROFESSIONAL ENGINEER
CIVIL ENGINEERING
1/19/2018

PRINCIPAL Engineering
PRINCIPAL Engineering, Inc.
1011 N. CAUSEWAY BLVD., SUITE 19
MANDEVILLE, LA 70471
PH: (985) 624-5800
info@pe-acc.com
www.pe-acc.com

DESIGNED BY: TN	DRAWN BY: TN	CHECKED BY: ACM	JOB NO. 1503
SCALE: (24x36) 1" = 10'	SCALE: (11x17) 1" = 20'	DATE: JAN. 2018	

WOODLAND DRIVE
BRIDGE REHABILITATION
ST. JOHN THE BAPTIST PARISH
LAPLACE, LOUISIANA

GUARD RAIL DETAILS

SHEET NO. 11

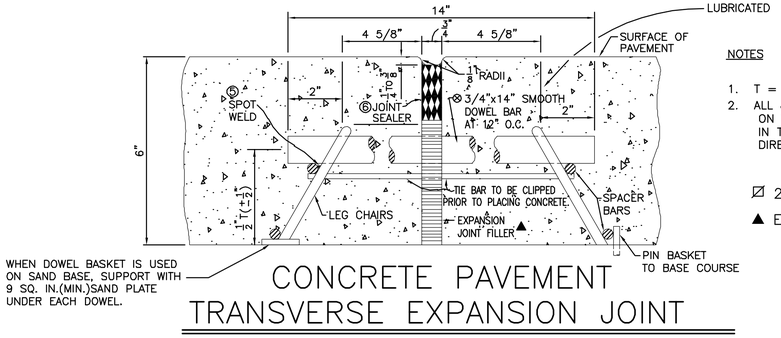

CONCRETE PAVEMENT TRANSVERSE EXPANSION JOINT

(EXPANSION JOINT LOCATED EVERY 150 FT)

NOTES

1. T = THICKNESS OF PAVEMENT
2. ALL JOINTS TO BE USED WHERE SHOWN ON THIS SHEET OR AS SHOWN ELSEWHERE IN THE PLANS OR AS OTHERWISE DIRECTED BY THE ENGINEER.

⌀ $2\frac{1}{2}$" FOR 8" PAVEMENT

▲ EXPANSION JOINT FILLER SHALL BE WOOD.

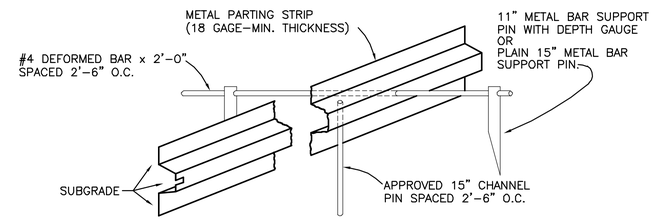

OBLIQUE VIEW METAL PARTING STRIP FOR LONGITUDINAL JOINT

ABBREVIATIONS:

EJ	CONCRETE PAVEMENT EXPANSION JOINT.
CJ	CONCRETE PAVEMENT CONTRACTION JOINT.
LJ	CONCRETE PAVEMENT LONGITUDINAL JOINT WITH KEYWAY
BJ	CONCRETE PAVEMENT BUTT JOINT

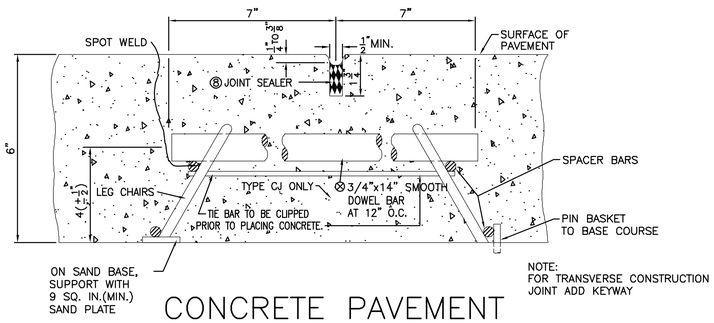

CONCRETE PAVEMENT TRANSVERSE CONTRACTION JOINT

(CONTRACTION JOINT LOCATED EVERY 15 FT)

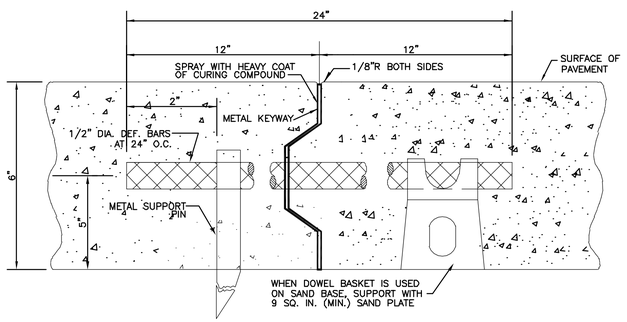

CONCRETE PAVEMENT LONGITUDINAL JOINT WITH KEYWAY

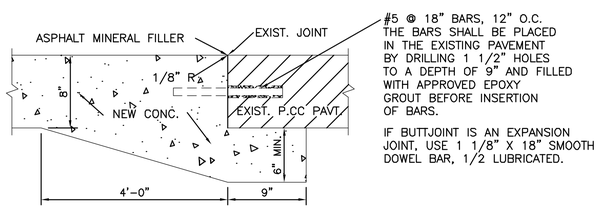

SECTION OF BUTT JOINT

PAVING NOTES

ALL PARISH MAINTAINED STREETS FOR NEW SUBDIVISION ARE TO BE THE FOLLOWING:

1. ~~RESIDENTIAL~~ LIGHT TRAFFIC STREETS SERVING LESS THAN ~~200 HOMES~~ SHALL BE ~~26' WIDE BACK~~ OF CURB TO BACK ~~OF CURB~~, MINIMUM 6" NON REINFORCED CONCRETE WITH ~~5" X 15"~~ ROLL OVER CURBS ALONG LOT FRONTAGES AND ~~6" VERTICAL~~ CURBS AT ~~INTERSECTIONS.~~ ROADWAY ~~CROWN~~ SHALL BE PARABOLIC OR TANGENT.

1a. 3/4" REDWOOD EXPANSION JOINTS WITH 3/4" SMOOTH DOWELS 14" LONG ON 12" CENTERS IN BASKETS TO BE PLACED AT ALL POINTS OF CURVATURE. ON STRAIGHT–AWAYS PLACED NO MORE THAN 300 FEET ON CENTERS.

1b. CONTRACTION JOINTS SHALL BE 15 FEET ON CENTERS AND SHALL HAVE 3/4" SMOOTH DOWELS 14" LONG ON 12" CENTERS AND SHALL BE HELD IN PLACE BY WELDED WIRE FABRIC BASKETS.

1c. 26' ROADWAY SHALL HAVE ONLY ONE LONGITUDINAL JOINT LOCATED ALONG THE CENTER LINE OF THE ROADWAY. THIS LONGITUDINAL JOINT SHALL BE FORMED WITH KEYWAY 16 GAUGE GALVANIZED WITH DOWELS #4 REBAR (30" LONG) ON 30" CENTERS.

1d. ALL IRREGULAR SHAPED CONCRETE i.e. CUL DE SACS AND INTERSECTIONS SHALL HAVE THE ABOVE SPECIFIED KEYWAY INSTALLED SO AS TO LIMIT THE SIZE OF THE PANELS TO NO GREATER THAN 15' ON ANY SIDE.

2. COLLECTOR AND ARTERIAL STREETS SERVING MORE THAN 300 HOMES SHALL BE MINIMUM 8" NON REINFORCED CONCRETE WITH 5" X 15" ROLL OVER CURBS ALONG LOT FRONTAGES AND 6" VERTICAL CURBS AT INTERSECTIONS AND MEDIAN SIDE. ROADWAY SHALL BE TANGENT CROWN WITH LONGITUDINAL KEYWAY JOINTS 16 GAUGE GALVANIZED WITH # 4 REBAR 30" LONG AT 30" CENTERS, TRANSVERSE CONTRACTION JOINTS SHALL BE MAX 20' O.C. WITH 1" SMOOTH DOWELS 18" LONG ON 12" CENTERS HELD IN PLACE BY WELDED WIRE FABRIC BASKETS. EXPANSION JOINTS SHALL BE 3/4" REDWOOD WITH THE SAME DOWELS BASKET AS ABOVE AND BE REPLACED AT ALL POINTS OF CURVATURE. IN STRAIGHT SECTIONS OF PAVING EXPANSION JOINTS ARE TO BE PLACED AT 300' O.C. MAXIMUM.

3. CONCRETE SHALL ATTAIN A MINIMUM STRENGTH OF 4,000 PSI AT 28 DAYS AND CONTAIN A MINIMUM CEMENT CONTENT OF 5 3/4 SACKS PER CUBIC YARD WITH A MAXIMUM WATER CEMENT RATIO OF SIX (6) GALLONS OF WATER PER SACK OR A CLASS B MIX IN ACCORDANCE WITH LA. STATE D.O.T.D.

4. ONE SET OF FOUR (4) CYLINDERS SHALL BE MADE FOR EACH HUNDRED (100) CUBIC YARDS OF CONCRETE PLACED. CYLINDERS SHALL BE BROKEN AT SEVEN (7) AND TWENTY–EIGHT (28) DAYS. ONE DENSITY TEST SHALL BE TAKEN FOR EACH TWO THOUSAND (2000) SQUARE YARDS OF BASE. CORES SHALL BE TAKEN AT 200' INTERVALS TO DETERMINE THICKNESS AND STRENGTH. ALL PANELS LESS THAN DESIGN THICKNESS WILL BE REMOVED.

5. TESTING LABORATORY SHALL BE APPROVED BY THE PARISH ENGINEER AND ALL COST SHALL BE BORNE BY THE CONTRACTOR.

6. CONCRETE SHALL BE DESIGNED WITH A WATER REDUCING ADMIXTURE AND SHALL HAVE A MAXIMUM SLUMP OF FOUR INCHES.

7. PAVEMENT SHALL NOT BE OPENED TO TRAFFIC UNTIL 21 DAYS AFTER PLACEMENT WITHOUT THE APPROVAL OF THE PARISH ENGINEER.

8. ALL DRAINAGE AND SEWERAGE STRUCTURES WITHIN THE PAVEMENT AREA SHALL BE BOXED OUT.

9. BASE COURSE SHALL CONSIST OF ASHTO A4 OR BETTER SOILS, L.L. OF 30, P.I. OF 10. BASE SHALL BE A MINIMUM OF 12" INCHES IN THICKNESS. DENSITY SHALL BE MAXIMUM OF 95% OF MAXIMUM DENSITY AS DETERMINED BY ASTM D698.

10. ALL SUBGRADE MATERIAL WHICH WILL NOT SATISFACTORILY COMPACT SHALL BE REMOVED AND REPLACED WITH MATERIAL THAT WILL COMPACT SATISFACTORILY. TOP 6" INCHES SHALL BE COMPACTED TO 95% STANDARD PROCTOR. WHERE THE SUBGRADE IS OF NON–UNIFORM COMPACTED NATURE, IT SHALL BE SCARIFIED TO A DEPTH OF 6" FOR ITS FULL WIDTH AND THE MATERIAL SPREAD AND BROUGHT TO LINE AND GRADE AND COMPACTED AS SPECIFIED ABOVE.

11. WHERE EXISTING GRADES OF NATURAL SOIL ARE LOW, CONTRACTOR WILL BE REQUIRED TO FILL THESE AREAS WITH PUMPED RIVER SAND UP TO THE PROPOSED GRADES. REGARDLESS OF THE DEPTH; THAT IS GREATER THAN THE 12" MINIMUM. THIS SAND FILL SHALL BE UNDER THE ROADWAY AND EXTEND FROM PROPERTY LINE ON BOTH SIDES OF ROADWAY PAVING.

12. ALL EXISTING DITCHES WITHIN PROPOSED ROADWAY RIGHT–OF–WAY SHALL BE MUCKED OUT UNTIL GOOD SOIL IS REACHED OR 24" MINIMUM, AND BACKFILLED WITH PUMPED RIVER SAND.

13. CONTRACTOR SHALL PROVIDE MEANS FOR TEMPORARY DRAINAGE DURING CONSTRUCTION.

14. THE USE OF SUPER PLASTICIZER CONCRETE IS ALLOWED, BUT THE ROADWAY CANNOT BE OPENED UNTIL CYLINDER MEETS THE DESIGN STRENGTH OF 4000 PSI.

15. JOINT SEALER FOR EXPANSION AND CONTRACTION JOINTS SHALL BE SEALED WITH DOW 888 MEETING FED. SPEC. T.T.–S–001543 OR SEALER MEETING FED. SPEC. T.T.–S–00230C.

CADD FILE NAME: 1503-DT-Roadway1

REVISIONS			
DATE:	REMARKS:		APP'D

STATE OF LOUISIANA — ANDRE C. MONNOT, License No. 33626, PROFESSIONAL ENGINEER, CIVIL ENGINEERING — 8/7/2018

PRINCIPAL Engineering
PRINCIPAL Engineering, Inc.
1011 N. CAUSEWAY BLVD., SUITE 19
MANDEVILLE, LA 70471
Ph: (985) 624-5001
info@pi-aec.com
www.pi-aec.com

DESIGNED BY: TN	DRAWN BY: TN	CHECKED BY: ACM	JOB NO. 1503
SCALE: (24x36) NTS	SCALE: (11x17) NTS		DATE: JAN. 2018

WOODLAND DRIVE BRIDGE REHABILITATION
ST. JOHN THE BAPTIST PARISH
LAPLACE, LOUISIANA

ROADWAY DETAILS

SHEET NO. 12

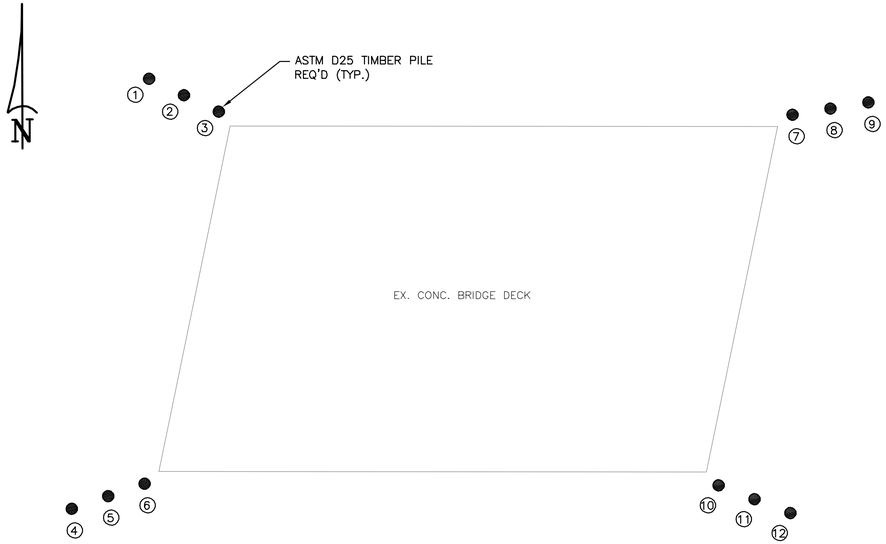

PILING PLAN

NOTES:

1. CONTRACTOR SHALL EXPOSE WATER MAIN PRIOR TO PILE DRIVING, AND PRE–DRILL PILING PAST DEPTH OF MAIN.
2. 4" X 8" SOUTHERN PINE SELECT STRUCTURAL TIMBER SHEETING SHALL BE USED. TREATED.
3. POSITION OF WINGWALLS MAY BE ADJUSTED SLIGHTLY IN THE FIELD, AS APPROVED BY THE ENGINEER.
4. EXISTING PILES FOR EXISTING WINGWALLS MAY BE CUT OFF 2' BELOW GROUND EXCEPT FOR THE PILES BLOCKING REQUIRED PILES 6 AND 7; THESE EXISTING PILES ARE TO BE EXTRACTED.

PILE	STATION	OFFSET
1	0+67.23	24.95' LT
2	0+70.84	23.24' LT
3	0+74.46	21.53' LT
4	0+59.21	19.78' RT
5	0+62.99	18.47' RT
6	0+66.77	17.17' RT
7	1+34.14	21.20' LT
8	1+38.08	21.85' LT
9	1+42.03	22.50' LT
10	1+26.44	17.35' RT
11	1+30.17	18.79' RT
12	1+33.90	20.23' RT

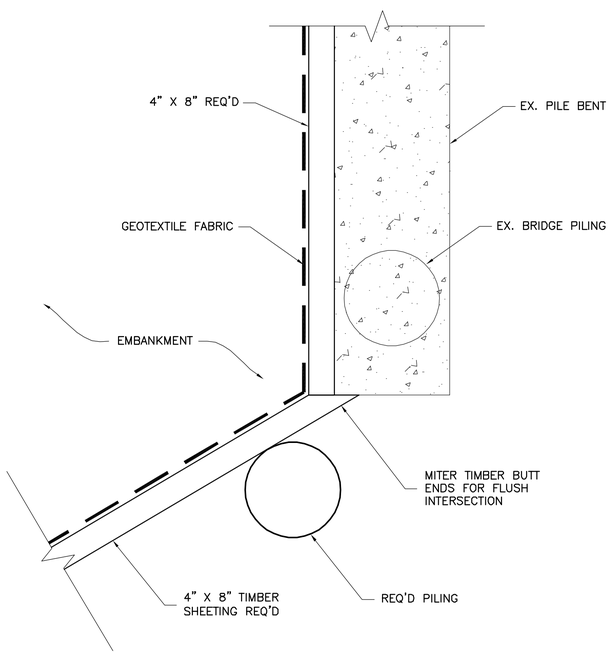

TIMBER SHEETING CORNER DETAIL

SCALE: NTS

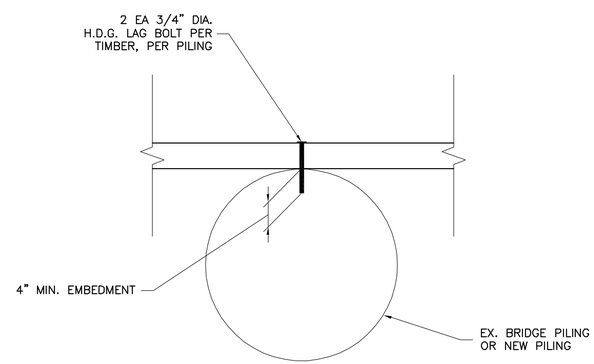

CONNECTION DETAIL

SCALE: NTS

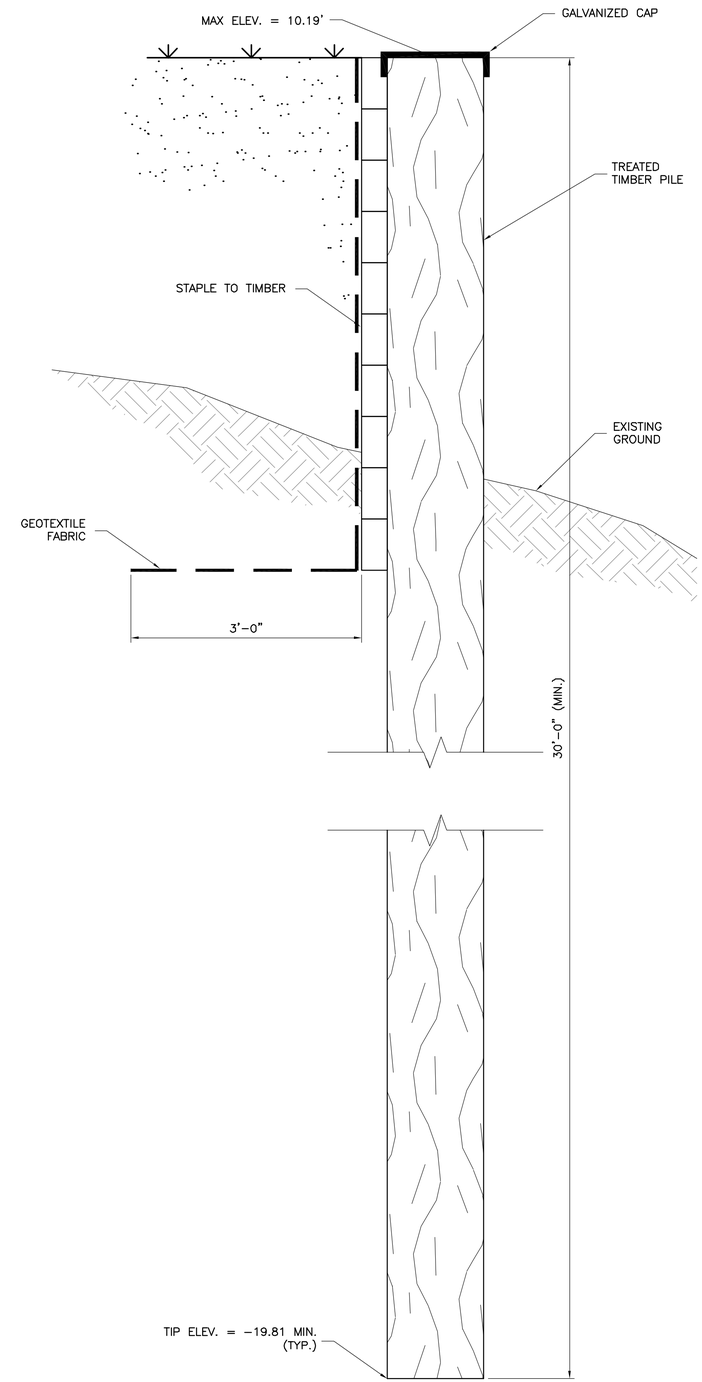

RETAINING WALL PILE DETAIL

SCALE: NTS

CADD FILE NAME: 1503-DT-Additional Details

REVISIONS

DATE:	REMARKS:	APP'D

STATE OF LOUISIANA — ANDRE C. MONNOT, License No. 33626, PROFESSIONAL ENGINEER, CIVIL ENGINEERING — 1/19/2018

PRINCIPAL Engineering
PRINCIPAL Engineering, Inc.
1011 N. CAUSEWAY BLVD., SUITE 19
MANDEVILLE, LA 70471
Ph: (985) 624-5001
info@pi-aec.com
www.pi-aec.com

DESIGNED BY: TN
DRAWN BY: TN
CHECKED BY: ACM
JOB NO. 1503
SCALE: (24x36) NTS
SCALE: (11x17) NTS
DATE: JAN. 2018

WOODLAND DRIVE
BRIDGE REHABILITATION
ST. JOHN THE BAPTIST PARISH
LAPLACE, LOUISIANA

ADDITIONAL PROJECT DETAILS

SHEET NO. 13

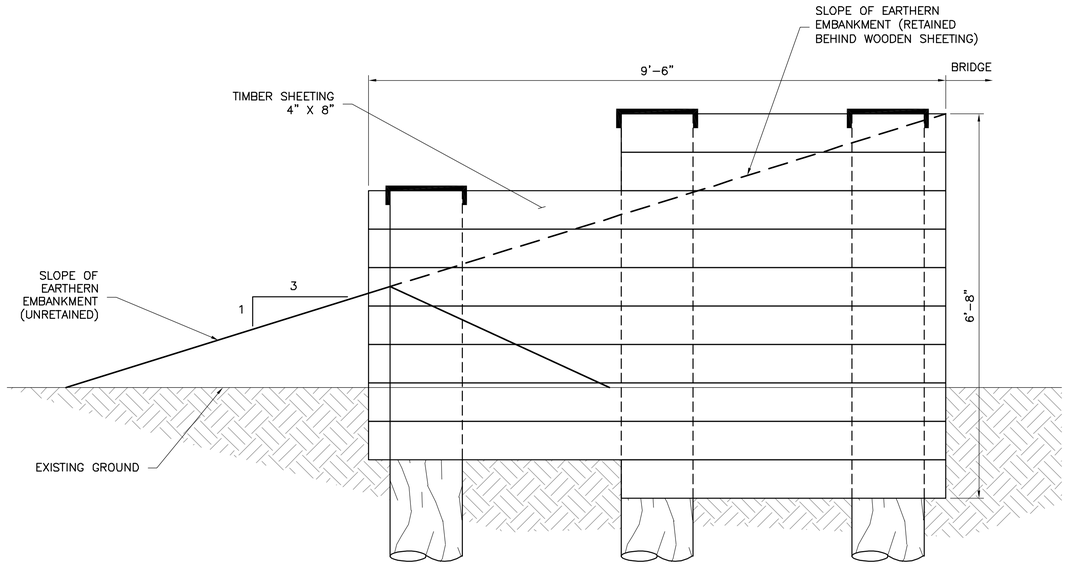

TYPICAL WINGWALL ELEVATION

SCALE: NTS

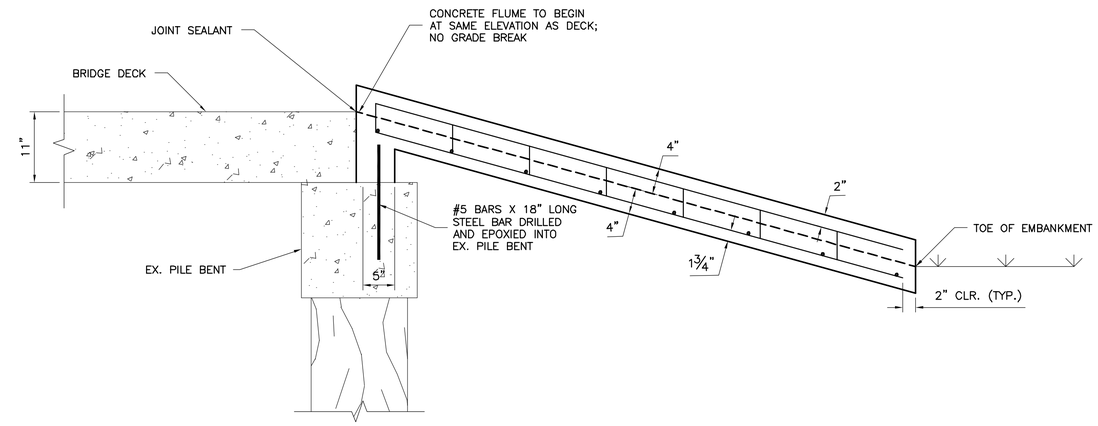

CONCRETE FLUME CONNECTION DETAIL

SCALE: 1"=1'-0"

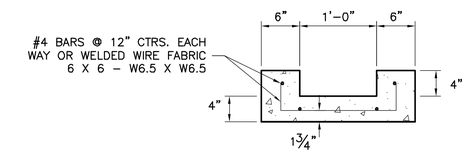

CONCRETE FLUME SECTION

SCALE: NTS

NOTES:

1. DIMENSIONS RELATING TO REINFORCING STEEL ARE TO BAR CENTERS.
2. REINFORCING STEEL SHALL HAVE 2" COVER UNLESS OTHERWISE NOTED.

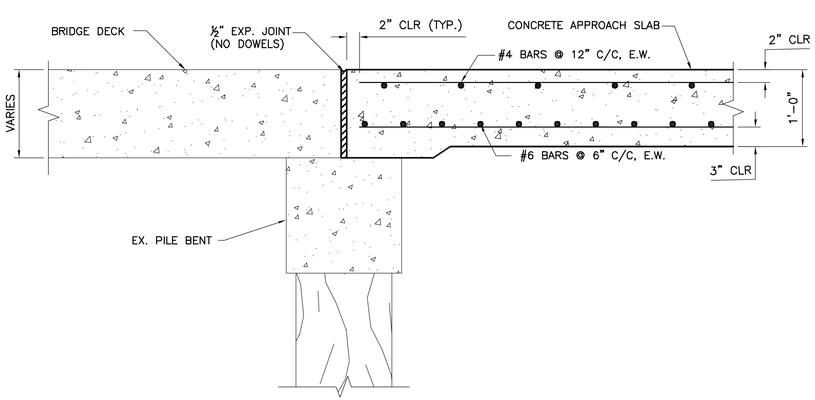

ROADWAY APPROACH SLAB SECTION

SCALE: 1"=1'-0"

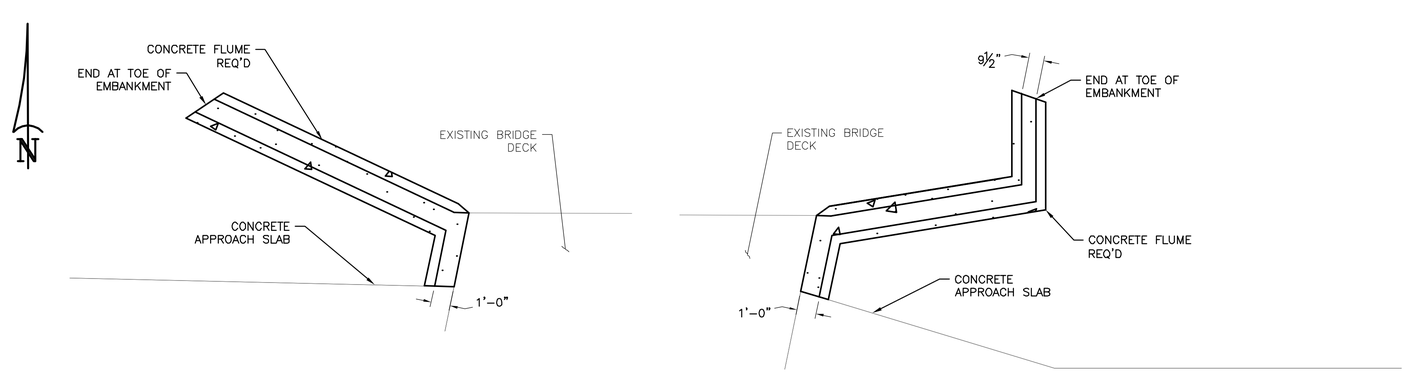

CONCRETE FLUME DETAILS

SCALE: NTS

CADD FILE NAME: 1503-DT-Additional Details

REVISIONS

DATE:	REMARKS:	APP'D

STATE OF LOUISIANA — ANDRE C. MONNOT, License No. 33626, PROFESSIONAL ENGINEER, CIVIL ENGINEERING — 1/19/2018

PRINCIPAL Engineering
PRINCIPAL Engineering, Inc.
1011 N. CAUSEWAY BLVD., SUITE 19
MANDEVILLE, LA 70471
Ph: (985) 624-5001
info@pi-aec.com
www.pi-aec.com

DESIGNED BY: TN | DRAWN BY: TN | CHECKED BY: ACM | JOB NO. 1503

SCALE: (24x36) NTS | SCALE: (11x17) NTS | DATE: JAN. 2018

WOODLAND DRIVE BRIDGE REHABILITATION
ST. JOHN THE BAPTIST PARISH
LAPLACE, LOUISIANA

ADDITIONAL PROJECT DETAILS

SHEET NO. 14

NOTES

1. CONTRACTOR SHALL MAINTAIN TRAFFIC CONTROL AND DETOUR SIGNAGE THROUGHOUT THE PROJECT DURATION.
2. ALL TRAFFIC CONTROL DEVICES AND SIGNS SHALL BE IN ACCORDANCE WITH THE LSSRB AND MUTCD.
3. TEMPORARY ACCESS ROUTE HAS BEEN ESTABLISHED BY OWNER. CONTRACTOR SHALL MAINTAIN SINGLE, 12 FT. WIDE (MIN.) LANE, FROM ST. ANDREWS BLVD. TO WWTP, WITH AGGREGATE SURFACE COURSE FOR DURATION OF USE. TEMPORARY ACCESS LANE SHALL BE FREE FROM STANDING WATER, EXPOSED SOIL, DEPRESSIONS EXCEEDING 2 INCHES, OR OTHER DEFECT ADVERSELY AFFECTING VEHICLES TRAVELING THROUGH.
4. ADDITIONAL TRAFFIC CONTROL SHALL BE EMPLOYED BY CONTRACTOR TO PROTECT TRAFFIC AND WORK, WHEN ADJACENT.

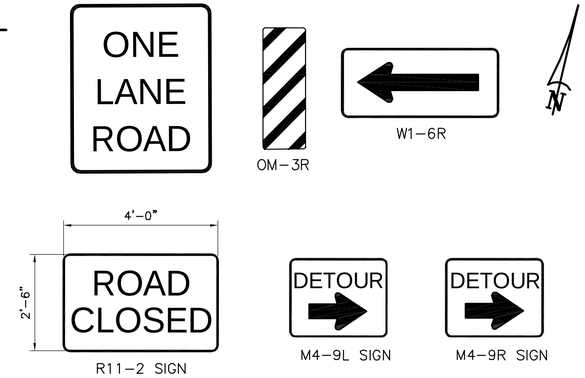

SCALE:
NTS

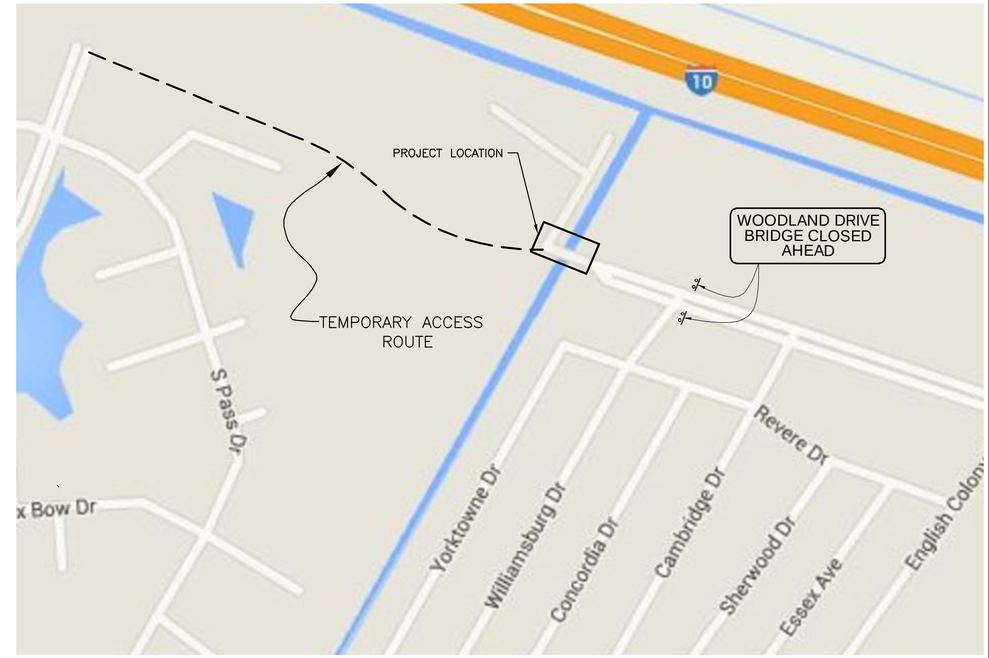

SCALE:
NTS

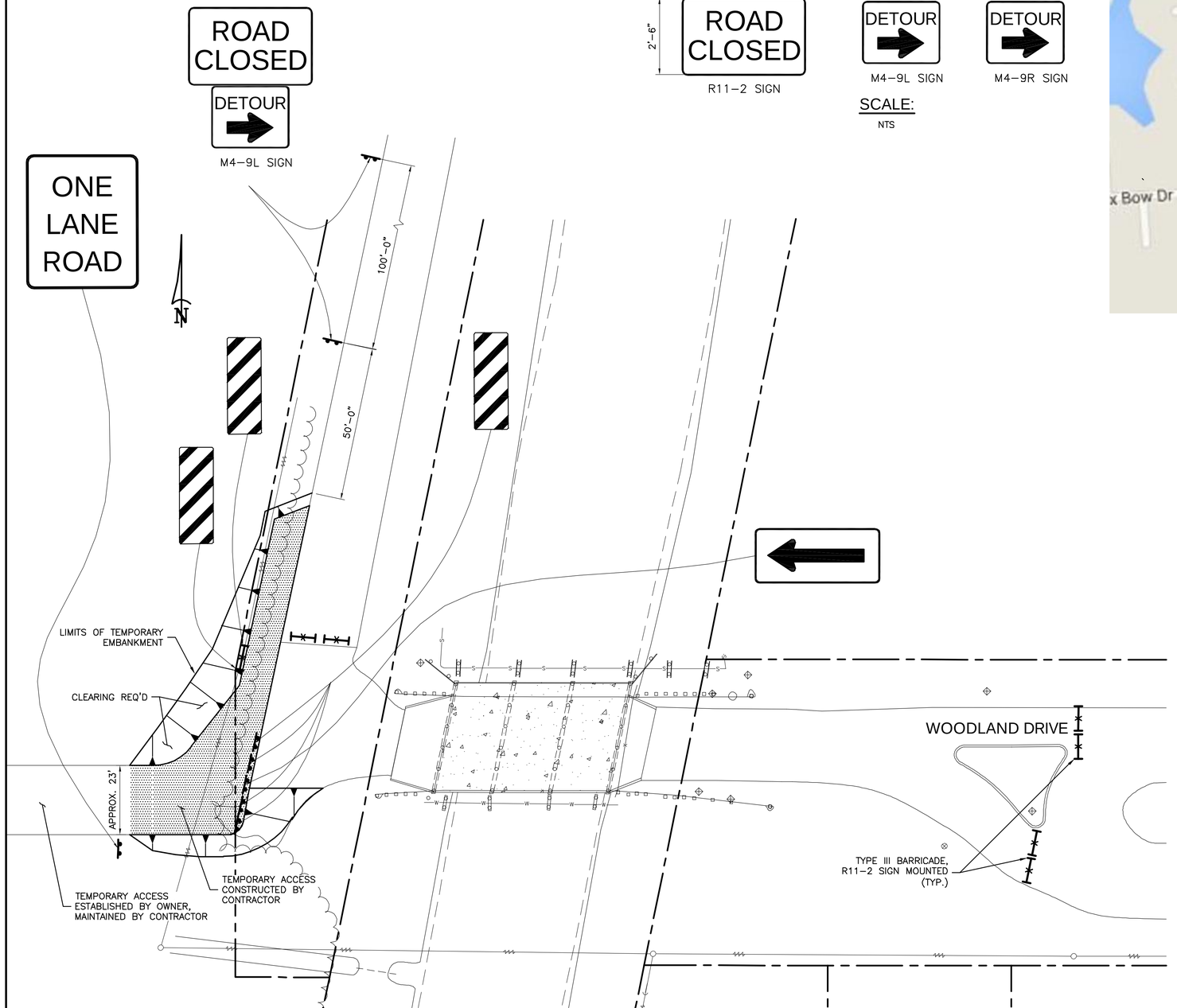

SCALE:
FULL SIZE: 1" = 20'
HALF SIZE: 1" = 40'

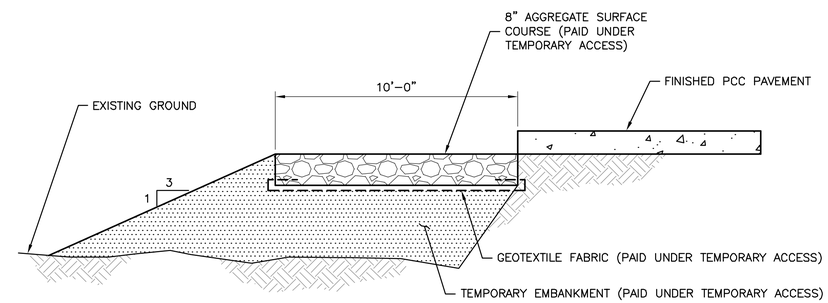

TEMPORARY ACCESS SECTION
NTS

NOTE:

TEMPORARY AGGREGATE LANE SHALL TRANSITION IN ELEVATION FROM OFFSET SHOWN AT FINISHED PCC PAVEMENT TO FLUSH WITH EXISTING ROADWAY TO REMAIN.

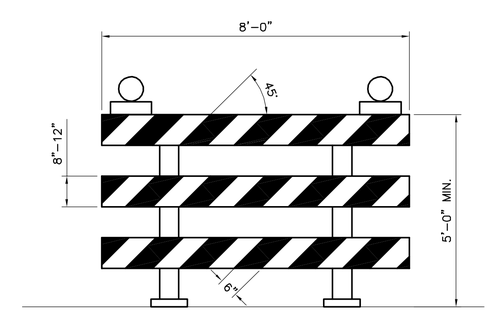

TYPE 3 BARRICADE WITH TWO TYPE B WARNING LIGHTS

SCALE:
NTS

CADD FILE NAME: 1503-PL-Traffic Control Plan

REVISIONS		
DATE:	REMARKS:	APP'D

STATE OF LOUISIANA — ANDRE C. MONNOT, License No. 33626, PROFESSIONAL ENGINEER IN CIVIL ENGINEERING — 1/19/2018

PRINCIPAL Engineering
PRINCIPAL Engineering, Inc.
1011 N. CAUSEWAY BLVD., SUITE 19
MANDEVILLE, LA 70471
Ph: (985) 624-5001
info@pl-aec.com
www.pl-aec.com

DESIGNED BY: TN	DRAWN BY: TN	CHECKED BY: ACM	JOB NO. 1503
SCALE: (24x36) -	SCALE: (11x17) -	DATE: JAN. 2018	

WOODLAND DRIVE BRIDGE REHABILITATION
ST. JOHN THE BAPTIST PARISH
LAPLACE, LOUISIANA

TRAFFIC CONTROL PLAN & TEMPORARY ACCESS

SHEET NO. 15