AIA® Document G714™ – 2007

Construction Change Directive

PROJECT: *(Name and address)*
St John The Baptist Parish Public Library
Main Branch Addition
2920 New Highway 51
LaPlace, Louisiana 70068

TO CONTRACTOR: *(Name and address)*
J. A. "Jack" Julius Jr., Inc.
857 Avenue C
Marrero, Louisiana 70072

DIRECTIVE NUMBER: 001
DATE: 16 January 2012

CONTRACT FOR: General Construction

CONTRACT DATED: January 18, 2011
ARCHITECT'S PROJECT NUMBER:
51143.00

OWNER: ☒
ARCHITECT: ☒
CONSULTANT: ☐
CONTRACTOR: ☒
FIELD: ☐
OTHER: ☐

You are hereby directed to make the following change(s) in this Contract:
(Describe briefly any proposed changes or list any attached information in the alternative)

Perform work in and around room 117 (server) to provide for an extension of the cable tray, plywood on walls at the extension and power/outlets as described in CPR # 11 dated 12 Jan 12

PROPOSED ADJUSTMENTS

1. The proposed basis of adjustment to the Contract Sum or Guaranteed Maximum Price is:
   - ☐ • Lump Sum decrease of $0.00
   - ☐ • Unit Price of $ per
   - ☐ • As provided in Section 7.3.3 of AIA Document A201-2007
   - ☒ • As follows: Cost not to exceed $7,435.75, as per CPR # 11. Itemized billing to be provided at the completion of the project.

2. The Contract Time is proposed to extend. The proposed adjustment, if any, is 2 days.

When signed by the Owner and Architect and received by the Contractor, this document becomes effective IMMEDIATELY as a Construction Change Directive (CCD), and the Contractor shall proceed with the change(s) described above.

Contractor signature indicates agreement with the proposed adjustments in Contract Sum and Contract Time set forth in this CCD.

Sizeler Thompson Brown Architects Project Design Group, LLC	St. John The Baptist Parish	J. A. "Jack" Julius Jr., Inc.
ARCHITECT *(Firm name)*	**OWNER** *(Firm name)*	**CONTRACTOR** *(Firm name)*
300 Lafayette Street, Suite 200, New Orleans, LA 70130	1801 West Airline Highway LaPlace, LA 70068	857 Avenue C, Marrero, Louisiana 70072
ADDRESS	**ADDRESS**	**ADDRESS**
Brian J. Beadle		Natalie Robottom
BY *(Signature)*	**BY** *(Signature)*	**BY** *(Signature)*
Brian J. Beadle, AIA	Natalie Robottom Parish President	J. A. Julius Jr.
(Typed name)	*(Typed name)*	*(Typed name)*
1.16.12	2-2-12	1-24-12
DATE	**DATE**	**DATE**

AIA Document G714™ – 2007. Copyright © 2001 and 2007 by The American Institute of Architects. **All rights reserved. WARNING: This AIA® Document is protected by U.S. Copyright Law and International Treaties. Unauthorized reproduction or distribution of this AIA® Document, or any portion of it, may result in severe civil and criminal penalties, and will be prosecuted to the maximum extent possible under the law.** This document was produced by AIA software at 11:19:59 on 01/16/2012 under Order No.7585899213_1 which expires on 04/03/2012, and is not for resale.
User Notes: (1815038298)

J. A. "JACK" JULIUS, JR., INC.

CPR # 11

857 AVENUE C, MARRERO, LA. 70072
PHONE: (504) 348-9801
FAX: (504) 348-3451

Job: ST JOHN THE BAPTIST PARISH
PUBLIC LIBRARY MAIN BRANCH ADDITION

Date: 12-Jan-12

RECAP OF CHANGE ORDER FOR: Work associated with SKE2 and SKE3 for electrical and cable tray.

Materials:

A.	(1) Pc. Plywood	25.00	
B.			
C.			
D.			
	Total Materials		25.00

Subcontract Work:

Subcontractor:	Pemberton Electric (Per attached)	5,554.00	
	TOTAL M/L		5,554.00

Contractor:

Supt. Hrs (33 x 8)	16	@	$28.00	=	448.00
Labor Hrs. Pick up/install p/w	4		$18.00		72.00
Estimator		@	$25.00	=	0.00
Clerical		@	$15.00	=	0.00
	Total Man Hour Cost				520.00

Taxes:

W. C.	520.00	@	23.32%	=	121.26
G. L.	520.00	@	10.50%	=	54.60
FICA	520.00	@	7.65%	=	39.78
U. E.	520.00	@	3.90%	=	20.28
FUTA	520.00	@	0.8%	=	4.16
	Total Taxes / Insurance:				240.08

Equipment Rental:

	Months		Monthly cost		
Portolet		@	100.00	=	
Trailer			100		
Dumpster			310		

Sub total		6,339.08
Insurance & Bond	3%	126.78
Total		6,465.87
Contractor's	15%	969.88
TOTAL:		7,435.75
Adjustments.		-0.75
TOTAL EXTRA TO CONTRACT:		7,435.00

Days add to contract time: 2

PEMBERTON ELECTRIC

4316 Courtland Drive
Metairie, Louisiana 70002

CHANGE ORDER

G701

Distributed To:

- ☐ Owner
- ☒ Contractor
- ☐ Architect
- ☐ Subcontractor
- ☐ Field
- ☐ Other

PROJECT: St. John The Baptist Parish Main Library Addition
2920 New Highway 51
LaPlace, Louisiana 70068

CHANGE ORDER NO: 5

DATE: January 8, 2012

PROJECT NO: 51143.00

TO: J.A."Jack" Julius, Jr., Inc.
857 Avenue C
Marrero, Louisiana 70072

CONTRACT DATE: February 10, 2011

CONTRACT FOR: Electric

The contract is changed as follows:

#	COST	DESCRIPTION
1	5,553.86	Work associated with SKE-2 and SKE-3 (back-up attached)

5,553.86 TOTAL

The original Contract Sum was	$	96,500.00
Net change by previously authorized Change Orders , 1, 2,	$	16,280.56
The Contract Sum prior to this Change Order was	$	112,780.56
The Contract Sum will be increased by this Change Order in the amount of	$	5,553.86
The new Contract Sum including this Change Order will be	$	118,334.42
The Contract Time will be increased by	Two (2) days.	
The date of Substantial Completion as of the date of this Change Order		

Accepted By:

CONTRACTOR	OWNER	OTHER
By:	By:	By:
Date	Date	Date

TORGO SOFTWARE http://www.torgo.net/ ©1998-2008 ALL RIGHTS RESERVED

Pemberton Electric, LLC

St. John The Baptist Parish Main Library Addition : C/O #5

Totals (Detailed) - Bid Summary: Default

Job Number	116
Bid Date	12/9/2010
Bid Time	2:00:00 PM
Job Location	2920 New Highway
Square Footage	0

Material Totals

Division	Total	Factor	Extended
01 Raceway, Fittings & Boxes	$315.43	0.00 %	$315.43
02 Wire & Cable	1,345.37	0.00 %	1,345.37
03 Distribution	0.00	0.00 %	0.00
05 Wiring Device & Covers	167.32	0.00 %	167.32
07 Misc	228.50	0.00 %	228.50
Total	$2,056.62		**$2,056.62**
Sales Tax (0.00%)			**$0.00**
Total Material			**$2,056.62**

Labor Hours

Division	Total	Factor	Extended
01 Raceway, Fittings & Boxes	14.94	0.00 %	14.94
02 Wire & Cable	18.92	0.00 %	18.92
03 Distribution	1.60	0.00 %	1.60
05 Wiring Device & Covers	2.76	0.00 %	2.76
07 Misc	12.39	0.00 %	12.39
Total	50.61		**50.61**

Labor Rates

Category	% of Total	Hours	Base Rate	Burden $	Burden %	Extended
Electrician	100.000	50.610	$37.50	16.88	45.000	$2,751.92
Total	100.000	50.610	x $54.37 (average of labor rate w/burden) =			**$2,751.92**

Non-Productive Labor

Description	Hours	Rate	Factor	Extended
Total				**$0.00**
Total Labor				**$2,751.92**
Job Subtotal (Prime Cost)				**$4,808.54**
Overhead (10.00%)				**480.85**
Profit (5.00%)				**264.47**

Job Total	$5,553.86
Actual Bid Price	$5,553.86
Material to Direct Labor ratio: 0.43	
Prime Cost per square foot	$0.00
Job Total per square foot	$0.00
Actual Bid Price per square ft	$0.00
Labor cost per square foot	$0.00
Labor hours per square foot	$0.00

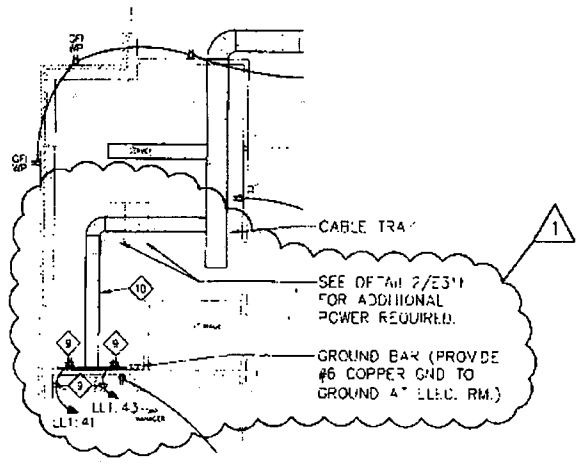

NORTH

1 SKE2 POWER PLAN
1/8=1'-0"

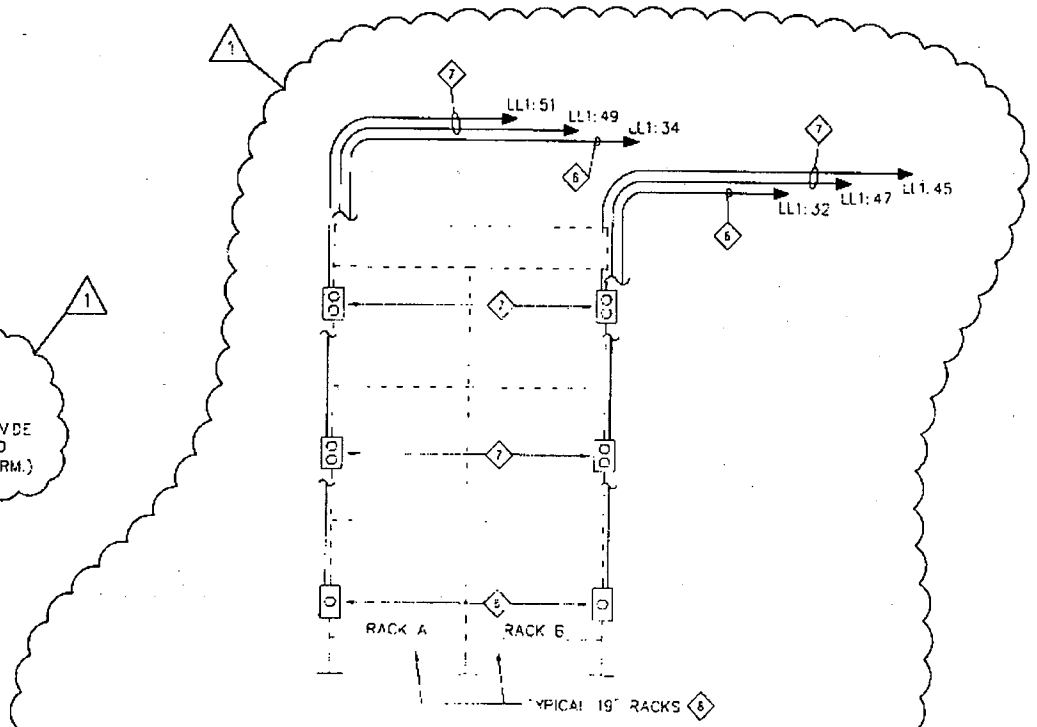

2 RACK INSTALLATION & POWER REQUIREMENTS
SCALE: NO SCALE

©2011 IMC 1828
CONSULTING ENGINEERS
INC
3120 20th STREET
METAIRIE LOUISIANA 70002

TITLE:

ST. JOHN THE BAPTIST PARISH
MAIN LIBRARY ADDITION
2920 NEW HIGHWAY 70068

JOB NO. 1828
DESIGN KMcL
DRAWN KLH
CHK'D RN
DATE 12/22/11

SHEET SKE-2
OF - SHT(S)

SPECIFIC NOTES FOR SHEET E311:

5. ONE 30A, 120 VOLT TWISTLOCK STYLE SIMPLEX OUTLET (L5-30) SHALL BE PROVIDED TO SERVE AN APC 3000 XL UPS IN EACH RACK. COORDINATE EXACT LOCATION WITH OWNER AND SECURE TO RACK WITHIN 12 INCHES OF UPS POSITION. CIRCUIT REQUIREMENTS SHALL INCLUDE 2 #10, #10 GND TO A 30A, SINGLE POLE, CIRCUIT BREAKER TO BE ADDED TO PANEL LL1. TYPE "MC" CABLE SHALL BE ALLOWED AND SHALL BE SUPPORTED AS REQUIRED BY NEC

7. PROVIDE 20A DUPLEX OUTLETS (5-20R) FOR USE WITH EITHER 15A OR 20A PLUG. LOCATIONS SHALL BE COORDINATED WITH OWNER TO BE WITHIN 12" OF OWNER'S APC 2200 XL & APC 750 XL UPS EQUIPMENT. CIRCUIT REQUIREMENTS SHALL INCLUDE 2 #12, #12 GND TO ONE OF THE SPARE 20A CIRCUIT BREAKERS EXISTING IN PANEL LL1. TYPE "MC" CABLE SHALL BE ALLOWED AND SHALL BE SUPPORTED AS REQUIRED BY THE NEC.

8. RACKS A & B SHALL BE PROVIDED BY THE OWNER & INSTALLED BY THE CONTRACTOR. SECURE TO FLOOR WITH SUITABLE ANCHORING HARDWARE FOR CONCRETE.

9. PROVIDE QUADRAPLEX AS SHOWN ON PLAN WITH 2 #12, #12 GND TO ONE OF THE SPARE 20A CIRCUIT BREAKERS EXISTING IN PANEL LL1. TYPE "MC" SHALL BE ALLOWED AND SHALL BE SUPPORTED AS REQUIRED BY THE NEC.

10. PROVIDE ADDITIONAL CABLE TRAY TO EXTEND EXISTING TRAY TO WALL AS SHOWN ON PLAN.

1

PANEL NAME	LL1	NUMBER OF PHASES:	THREE	PROJECT NAME:	ST JOHN THE BAPTIST LIBRARY ADDITIONS
VOLTAGE:	208Y/120	NEUTRAL BUS:	YES		
BUS SIZE (AMPS)	225	GROUND BAR:	YES	PROJECT NUMBER:	1828
MAIN CIRCUIT BREAKER SIZE	225	MOUNTING:	SURFACE	DATE	12-22-2011
AIC RATING:	10K	FEED-THRU LUGS	NO		
EST SSC AMPS AVAIL:	0	OTHER OPTIONS:	NONE		SECTION 2 OF 2

	ITEM	AMP RATING	# POLES	CKT #	LEFT LOADING A	B	C	RIGHT LOADING A	B	C	CKT #	# POLES	AMP RATING	ITEM	
1	RECEPTACLES RM 114	20	1	31	1080			2800			32	2	30	CONDENSING UNIT CU-3	2
3	RECEPTACLES RM 112	20	1	33		1080			2800						4
5	RECEPTACLES RM 108	20	1	35			900			1680	34	2	30	CONDENSING UNIT CU-4	6
7	RECEPTACLES RM 140	20	1	37	720			1980							8
9															
11	AIR HANDLING UNIT AHU-4	60	2	39		6100			720		36	1	20	REST RM PLUMB FIXTURES	10
13							5100			360	38	1	20	MECHANICAL CNTL POWER	12
15	Telecom Backboard	20	1	41	500			2200			40	2	30	WATER HEATER EWH-1	14
17	Telecom Backboard	20	1	43		620			2250						16
19	Rack outlet	20	1	45			600							SPARE	18
21	Rack outlets	20	1	47	500			2200			42	1	20	Rack Power - 30A	32
23	Rack outlets	20	1	49		900			2200		44	1	20	Rack Power - 30A	34
25	Rack outlets	20	1	51			480							SPARE	36
27	SPARE	20	1											SPACE	38
29	SPARE	20	1											SPACE	40
31	SPARE	20	1											SPACE	42
33															44
35															46
37															48
39															50
41															52
					3200	7500	7400	9030	7770	2340					

	LOAD	DVRSTY	DMND
1 LIGHTS	720	1.00	720
2 RECEPT <= 10KVA	3780	1.00	3780
RECEPT > 10KVA	0	0.60	0
3 AHU	10200	1.00	10200
4 CU	9180	1.00	9180
5 MISS	360	1.00	360
6 WATER HEATER	4500	1.00	4500
7 rack power	8800	1.00	8800
8	0	1.00	0
9	0	1.00	0
10	0	1.00	0

©2011 IMC 1828
CONSULTING ENGINEERS INC
3120 20th STREET
METAIRIE LOUISIANA 70002

TITLE:

ST. JOHN THE BAPTIST PARISH
MAIN LIBRARY ADDITION
2920 NEW HIGHWAY 70068

JOB NO. 1828
DESIGN KMcL
DRAWN KLH
CHK'D RN
DATE 12/22/11

SHEET SKE-3

OF - SHT(S)